Extron

WC Pro 160

Workspace Automation Controller

User Guide

Workspace Automation Controller Products

68-3287-01, Rev. B
09 25

Safety Instructions

Safety Instructions • English

WARNING: This symbol, ⚠, when used on the product, is intended to alert the user of the presence of uninsulated dangerous voltage within the product's enclosure that may present a risk of electric shock.

ATTENTION: This symbol, ⚠, when used on the product, is intended to alert the user of important operating and maintenance (servicing) instructions in the literature provided with the equipment.

For information on safety guidelines, regulatory compliances, EMI/EMF compatibility, accessibility, and related topics, see the Extron Safety and Regulatory Compliance Guide, part number 68-290-01, on the Extron website, **www.extron.com.**

تعليمات السلامة • العربية

تحذير: هذا الرمز، ⚠، عند استخدامه على المنتج، مخصص لتنبيه المستخدم فيما يتعلق بوجود جهد كهربائي غير معزول على الغلاف الخارجي للمنتج وهو ما قد ينطوي على مخاطر حدوث صدمة كهربائية.

انتبه: هذا الرمز، ⚠، عند استخدامه على المنتج، مخصص لتنبيه المستخدم بتعليمات التشغيل والصيانة الهامة (الخدمة) في المواد التي يتم توفيرها مع المعدات.

للحصول على المزيد من المعلومات حول إرشادات السلامة، والتوافقات التنظيمية، والتوافق الكهرومغناطيسي/المجال الكهرومغناطيسي، وإمكانية الوصول، والموضوعات ذات الصلة، يُرجى مراجعة دليل السلامة والتوافق التنظيمي الخاص بإكسترون، الجزء رقم 68-290-01، على موقع إكسترون، **www.extron.com.**

Sicherheitsanweisungen • Deutsch

WARUNG: Dieses Symbol ⚠ auf demProdukt soll den Benutzer darauf aufmerksam machen, dass im Inneren des Gehäuses dieses Produktes gefährliche Spannungen herrschen, die nicht isoliert sind und die einen elektrischen Schlag verursachen können.

VORSICHT: Dieses Symbol ⚠ auf dem Produkt soll dem Benutzer in der im Lieferumfang enthaltenen Dokumentation besonders wichtige Hinweise zur Bedienung und Wartung (Instandhaltung) geben.

Weitere Informationen über die Sicherheitsrichtlinien, Produkthandhabung, EMI/EMF-Kompatibilität, Zugänglichkeit und verwandte Themen finden Sie in den Extron-Richtlinien für Sicherheit und Handhabung (Artikelnummer 68-290-01) auf der Extron-Website, **www.extron.com**.

Instrucciones de seguridad • Español

ADVERTENCIA: Este símbolo, ⚠, cuando se utiliza en el producto, avisa al usuario de la presencia de voltaje peligroso sin aislar dentro del producto, lo que puede representar un riesgo de descarga eléctrica.

ATENCIÓN: Este símbolo, ⚠, cuando se utiliza en el producto, avisa al usuario de la presencia de importantes instrucciones de uso y mantenimiento estas estan incluidas en la documentación proporcionada con el equipo.

Para obtener información sobre directrices de seguridad, cumplimiento de normativas, compatibilidad electromagnética, accesibilidad y temas relacionados, consulte la Guía de cumplimiento de normativas y seguridad de Extron, referencia 68-290-01, en el sitio Web de Extron, **www.extron.com**.

Instructions de sécurité • Français

AVERTISSEMENT : Ce pictogramme, ⚠, lorsqu'il est utilisé sur le produit, signale à l'utilisateur la présence à l'intérieur du boîtier du produit d'une tension électrique dangereuse susceptible de provoquer un choc électrique.

ATTENTION : Ce pictogramme, ⚠, lorsqu'il est utilisé sur le produit, signale à l'utilisateur des instructions d'utilisation ou de maintenance importantes qui se trouvent dans la documentation fournie avec l'équipement.

Pour en savoir plus sur les règles de sécurité, la conformité à la réglementation, la compatibilité EMI/EMF, l'accessibilité, et autres sujets connexes, lisez les informations de sécurité et de conformité Extron, réf. 68-290-01, sur le site Extron, **www.extron.com**.

Istruzioni di sicurezza • Italiano

AVVERTENZA: Il simbolo, ⚠, se usato sul prodotto, serve ad avvertire l'utente della presenza di tensione non isolata pericolosa all'interno del contenitore del prodotto che può costituire un rischio di scosse elettriche.

ATTENTZIONE: Il simbolo, ⚠, se usato sul prodotto, serve ad avvertire l'utente della presenza di importanti istruzioni di funzionamento e manutenzione nella documentazione fornita con l'apparecchio.

Per informazioni su parametri di sicurezza, conformità alle normative, compatibilità EMI/EMF, accessibilità e argomenti simili, fare riferimento alla Guida alla conformità normativa e di sicurezza di Extron, cod. articolo 68-290-01, sul sito web di Extron, **www.extron.com**.

Instrukcje bezpieczeństwa • Polska

OSTRZEŻENIE: Ten symbol, ⚠, gdy używany na produkt, ma na celu poinformować użytkownika o obecności izolowanego i niebezpiecznego napięcia wewnątrz obudowy produktu, który może stanowić zagrożenie porażenia prądem elektrycznym.

UWAGI: Ten symbol, ⚠, gdy używany na produkt, jest przeznaczony do ostrzegania użytkownika ważne operacyjne oraz instrukcje konserwacji (obsługi) w literaturze, wyposażone w sprzęt.

Informacji na temat wytycznych w sprawie bezpieczeństwa, regulacji wzajemnej zgodności, zgodność EMI/EMF, dostępności i Tematy pokrewne, zobacz Extron bezpieczeństwa i regulacyjnego zgodności przewodnik, część numer 68-290-01, na stronie internetowej Extron, **www.extron.com**.

Инструкция по технике безопасности • Русский

ПРЕДУПРЕЖДЕНИЕ: Данный символ, ⚠, если указан на продукте, предупреждает пользователя о наличии неизолированного опасного напряжения внутри корпуса продукта, которое может привести к поражению электрическим током.

ВНИМАНИЕ: Данный символ, ⚠, если указан на продукте, предупреждает пользователя о наличии важных инструкций по эксплуатации и обслуживанию в руководстве, прилагаемом к данному оборудованию.

Для получения информации о правилах техники безопасности, соблюдении нормативных требований, электромагнитной совместимости (ЭМП/ЭДС), возможности доступа и других вопросах см. руководство по безопасности и соблюдению нормативных требований Extron на сайте Extron: , **www.extron.com**, номер по каталогу - 68-290-01.

安全说明 • 简体中文

警告: ⚠产品上的这个标志意在警告用户, 该产品机壳内有暴露的危险电压, 有触电危险。

注意: ⚠产品上的这个标志意在提示用户, 设备随附的用户手册中有重要的操作和维护(维修)说明。

关于我们产品的安全指南、遵循的规范、EMI/EMF 的兼容性、无障碍使用的特性等相关内容，敬请访问 Extron 网站，**www.extron.com**，参见 Extron 安全规范指南，产品编号 68-290-01。

安全記事 • 繁體中文

警告: 若產品上使用此符號，是為了提醒使用者，產品機殼內存在未隔離的危險電壓，可能會導致觸電之風險。

注意 若產品上使用此符號，是為了提醒使用者，設備隨附的用戶手冊中有重要的操作和維護（維修）說明。

有關安全性指導方針、法規遵守、EMI/EMF 相容性、存取範圍和相關主題的詳細資訊，請瀏覽 Extron 網站：**www.extron.com**，然後參閱《Extron 安全性與法規遵守手冊》，準則編號 68-290-01。

安全上のご注意 • 日本語

警告: この記号 が製品上に表示されている場合は、筐体内に絶縁されていない高電圧が流れ、感電の危険があることを示しています。

注意: この記号 が製品上に表示されている場合は、本機の取扱説明書に記載されている重要な操作と保守(整備)の指示についてユーザーの注意を喚起するものです。

安全上のご注意、法規厳守、EMI/EMF適合性、その他の関連項目については、エクストロンのウェブサイト **www.extron.com** より『Extron Safety and Regulatory Compliance Guide』(P/N 68-290-01) をご覧ください。

안전 지침 • 한국어

경고: 이 기호 가 제품에 사용될 경우, 제품의 인클로저 내에 있는 접지되지 않은 위험한 전류로 인해 사용자가 감전될 위험이 있음을 경고합니다.

주의: 이 기호 가 제품에 사용될 경우, 장비와 함께 제공된 책자에 나와 있는 주요 운영 및 유지보수(정비) 지침을 경고합니다.

안전 가이드라인, 규제 준수, EMI/EMF 호환성, 접근성, 그리고 관련 항목에 대한 자세한 내용은 Extron 웹 사이트(**www.extron.com**)의 Extron 안전 및 규제 준수 안내서, 68-290-01 조항을 참조하십시오.

Copyright
© 2025 Extron. All rights reserved. **www.extron.com**

Trademarks
All trademarks mentioned in this guide are the properties of their respective owners.
The following registered trademarks (®), registered service marks (SM), and trademarks (TM) are the property of RGB Systems, Inc. or Extron (see the current list of trademarks on the **Terms of Use** page at **www.extron.com**):

Registered Trademarks (®)
Extron®, Cable Cubby®, ControlScript®, CrossPoint®, DTP®, eBUS®, EDID Manager®, EDID Minder®, eLink®, Everlast®, Flat Field®, FlexOS®, Glitch Free®, GlobalViewer®, Global Configurator®, Global Scripter®, Hideaway®, HyperLane®, IP Intercom®, IP Link®, Key Minder®, LinkLicense®, LockIt®, MediaLink®, MediaPort®, NAV®, NetPA®, PlenumVault®, PoleVault®, PowerCage®, PURE3®, Quantum®, ShareLink®, Show Me®, StudioStation®, SoundField®, SpeedMount®, SpeedSwitch®, System INTEGRATOR®, TeamWork®, TouchLink®, V-Lock®, VN-Matrix®, VoiceLift®, WallVault®, WindoWall®, XPA®, XTP®, XTP Systems®, and ZipClip®
Registered Service Mark(SM) : S3 Service Support Solutions
Trademarks (TM)
AAP™, AFL™ - Accu-RATE Frame Lock, ADSP™ - Advanced Digital Sync Processing, AVEdge™, CableCover™, CDRS™ - Class D Ripple Suppression, Codec Connect™, ConferenceShare™, DDSP™ - Digital Display Sync Processing, DMI™ - Dynamic Motion Interpolation, Driver Configurator™, DSP Configurator™, DSP Configurator Pro™, DSVP™ - Digital Sync Validation Processing, EQIP™, FastBite™, Flex55™, FOX™, FOXBOX™, InstaWake™, IP Intercom HelpDesk™, MAAP™, MicroDigital™, Opti-Torque™, PendantConnect™, ProDSP™, QS-FPC™ - QuickSwitch Front Panel Controller, Room Agent™, Scope-Trigger™, SIS™ - Simple Instruction Set, Skew-Free™, SpeedNav™, Triple-Action Switching™, True4K™, True8K™, Vector™ 4K, WebShare™, XTRA™, and ZipCaddy™

FCC Class A Notice

This equipment has been tested and found to comply with the limits for a Class A digital device, pursuant to part 15 of the FCC rules. The Class A limits provide reasonable protection against harmful interference when the equipment is operated in a commercial environment. This equipment generates, uses, and can radiate radio frequency energy and, if not installed and used in accordance with the instruction manual, may cause harmful interference to radio communications. Operation of this equipment in a residential area is likely to cause interference. This interference must be corrected at the expense of the user.

NOTE: For more information on safety guidelines, regulatory compliances, EMI/EMF compatibility, accessibility, and related topics, see the **Extron Safety and Regulatory Compliance Guide** on the Extron website.

VCCI-A Notice

この装置は、クラスＡ情報技術装置です。この装置を家庭環境で使用すると、電波妨害を引き起こすことがあります。その場合には使用者が適切な対策を講ずるよう要求されることがあります。
ＶＣＣＩ－Ａ

Battery Notice

This product contains a battery. **Do not open the unit to replace the battery**. If the battery needs replacing, return the entire unit to Extron (for the correct address, see the Extron Warranty section on the last page of this guide).

CAUTION: Risk of explosion. Do not replace the battery with an incorrect type. Dispose of used batteries according to the instructions.

ATTENTION : Risque d’explosion. Ne pas remplacer la pile par le mauvais type de pile. Débarrassez-vous des piles usagées selon le mode d’emploi.

Conventions Used in this Guide

Notifications

The following notifications are used in this guide:

CAUTION: Risk of minor personal injury.
ATTENTION : Risque de blessure mineure.

ATTENTION: Risk of property damage.
ATTENTION: Risque de dommages matériels.

NOTE: A note draws attention to important information.

TIP: A tip provides a suggestion to make working with the application easier.

Software Commands

Commands are written in the fonts shown here:

`^AR Merge Scene, 0p1 scene 1,1 ^B 51 ^W^C.0`

`[01] R 0004 0030 0040 0080 00600 [02] 35 [17] [03]`

Esc X1 * X17 * X20 * X23 * X21 CE ←

NOTE: For commands and examples of computer or device responses used in this guide, the character "0" is the number zero and "O" is the capital letter "o."

Computer responses and directory paths that do not have variables are written in the font shown here:

`Reply from 208.132.180.48: bytes=32 times=2ms TTL=32`

`C:\Program Files\Extron`

Variables are written in *italics* as shown here:

`ping` *xxx.xxx.xxx.xxx* `–t`

`SOH R` *Data* `STX` *Command* `ETB ETX`

Selectable items, such as menu names, menu options, buttons, tabs, and field names are written in the font shown here:

From the **File** menu, select **New**.

Click the **OK** button.

Specifications Availability

Product specifications are available on the Extron website, **www.extron.com**.

Extron Glossary of Terms

A glossary of terms is available at **https://www.extron.com/technology/glossary.aspx**

Contents

Introduction **1**
Before You Begin 1
What This Guide Contains 1
Conventions Used in this Guide 1
About the WC Pro 160 1
Control Software 2
Features 2
PC System Requirements 3
Application Diagrams 4
Configuration Procedure for the Controller 5
Pre-configured WC Pro 160 5
Configuration of the WC Pro 160 Using the Internal Web Page 5
Configuration Using Toolbelt Software 5
Advanced Configuration Using LinkLicense 6
About Global Configurator (with GC Professional and GC Plus Modes) 6
About ControlScript Programming 6

Installation and Operation **7**
Installation Step 1: Get Ready 7
Installation Step 2: Mount or Place the Unit 8
UL Guidelines for Rack Mounting 8
Accessibility and Americans with Disabilities Act (ADA) Compliance 9
Installation Step 3: Cable Devices 9
Rear Panel Features 9
Connecting to the Digital I/O Ports 15
CEC Control 18
Installation Step 4: Set Up Network Communication 22
Installation Step 5: Configure the WC Pro 160 23
Installation Step 6: Test and Troubleshoot 23
Front Panel Features 24
Resetting the Unit 25
Reset Mode Summary Table 26

Remote Configuration and Control **30**
Using Simple Instruction Set (SIS) Commands 30
Host-to-Workspace Automation Controller Communications 30
Controller-initiated Messages 30
Error Responses 31
Using the Command and Response Table 31
Symbol Definitions 31
Command and Response Table for SIS Commands 33

Software-based Configuration and Control 35
Configuration and Control: An Overview 35
Advanced Configuration Procedure for the Controller 36
Downloading the Software and Getting Started 37
Locating Software, Firmware, and Driver Files on the Extron Website 37
Things to Do After Installing GC and Before Starting a Project 38
Using Global Configurator: Helpful Tips 39
Troubleshooting Connections and Configuration 39
Power Connections 39
Data Connections 39
Device Control Connections and Configuration 40

Internal Web Pages 41
Accessing the Internal Web Pages 41
Web Pages 42
Device Utilities Page 43
Display Control Page 47
EDID Page 51
Backup, Restore, Reboot, and Reset Links 52
About the WC Pro 160 53

Reference Information 54
UL Guidelines 54
Best Practices for Cleaning Your Extron Products 54
Network Port Requirements and Licensed Third-party Software 55
File Types: A Key to Extron-Specific File Names 55
SNMP 55
Firmware Updates 56
Determining the Firmware Version 56
Updating the Firmware 57

Introduction

This section covers the following information you should know about this guide and the WC Pro 160 Workspace Automation Controller before installation:

- **Before You Begin**
- **About the WC Pro 160**
- **PC System Requirements**
- **Application Diagrams**
- **Configuration Procedure for the Controller**
- **About Global Configurator (with GC Professional and GC Plus Modes)**
- **About ControlScript Programming**

Before You Begin

What This Guide Contains

This user guide provides instructions for an experienced installer to install an Extron WC Pro 160 Workspace Automation Controller. This guide includes detailed information and best practices recommendations about cabling the controller, a brief overview of the configuration process, and reference information.

This guide does not contain instructions on detailed software-related setup steps or details of configuration within the software (see the *Global Configurator Help* file, the *ControlScript Deployment Utility Help File*, and help files for related programs). The software help files describe how to use each program to download drivers, add AV devices to a configuration, and configure basic functions.

In addition to GC, the Extron Product Configuration Software (PCS) is available for configuring and managing EDID (see **Downloading the Software and Getting Started** on page 37 to obtain PCS).

Conventions Used in this Guide

- Throughout this guide the WC Pro 160 is also referred to as the “WC”, “WC Pro”, or “controller”.
- Global Configurator software is referred to as “GC”, which can be run in Global Configurator Professional mode (“GC Professional”) or Global Configurator Plus mode (“GC Plus”).
- “ControlScript programming” encompasses ControlScript Deployment Utility (CSDU) and ControlScript Extension.
- The GlobalViewer Enterprise application is referred to as “GVE”. Unless otherwise noted, in images of software or web pages, circled numbers correspond to procedural steps.

About the WC Pro 160

The WC Pro 160 Workspace Automation Controller is a workspace automation controller designed for small and medium size conference spaces, with resolutions up to 4K (4096 x 2160) at 60 Hz, 24-bit color (8 bits per color), and 4:4:4 chroma sampling. The unit is housed in a 1 inch (25 mm) high, 6.5 inches (165 mm) wide, 3 inches (76 mm) deep metal enclosure. It has an HDMI pass-through port that detects signal presence and passes the signal to a connected display to turn it on and off. It also contains an integrated control processor with LinkLicense® compatibility, and is powered over Ethernet (PoE) or through a 12 VDC port. Control of the display is available via Ethernet, bidirectional RS-232, IR, and CEC.

The product also provides EDID Minder, ability to enable and disable HDCP, de-embedded balanced or unbalanced analog audio output, two configurable digital I/O ports, and a power port that supplies +24 VDC to power accessories such as the Extron OCS 100 occupancy sensors. The controller is ready to use out of the box with universal CEC to control the display device.

Internal web pages are provided to configure the WC Pro 160. In addition, Extron Toolbelt® and Extron Product Configuration Software (PCS) can be used to discover and manage the controller.

Control Software

With the appropriate LinkLicense, the Extron Global Configurator® software (Global Configurator Professional [GC Professional] or Global Configurator Plus [GC Plus]) is also available to configure the controller. The WC Pro 160 integrates seamlessly with Extron GlobalViewer Enterprise (GVE) software and Extron Control Apps for remote control applications.

The control system can also be programmed using ControlScript programming (see the *ControlScript Deployment Utility Help File* for instructions).

The control processors support TouchLink Pro touchpanel interfaces, Network Button Panels (NBPs), and Secure Platform Devices (SPDs) over a standard Ethernet network. The software applications are available at **www.extron.com**.

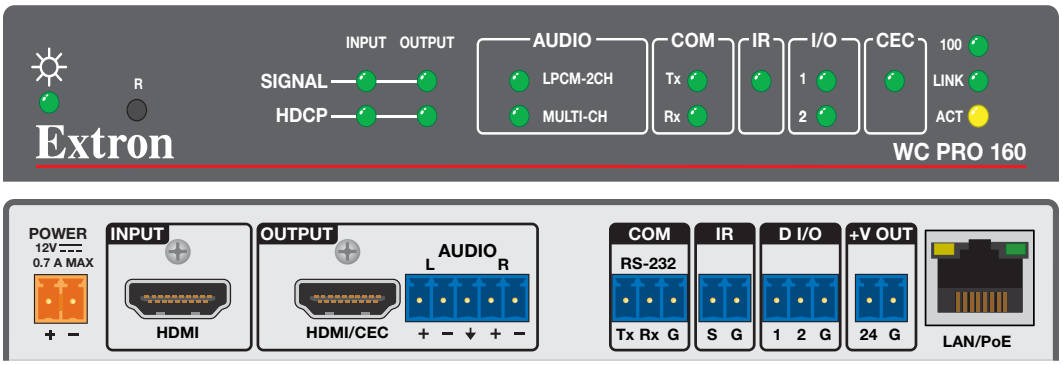

Figure 1. WC Pro 160 Front and Rear Panels

After the WC Pro 160 is set up to work as desired (IP addresses and functions set up, drivers assigned to ports, digital input and output configured, and user interface configured), a project configuration file containing the information is built, saved, and uploaded into the WC Pro 160.

Features

- **Out-of-the-box functionality that supports display control via CEC from an HDMI port** — This delivers convenient, automatic display power control using room occupancy detection or signal presence.
- **Supports computer and video resolutions up to 4K/60 @ 4:4:4** — Resolutions up to 4096x2160 @ 60 Hz with 4:4:4 chroma sampling at 8 bits of color.
- **EDID Minder® automatically manages EDID communication between connected devices** — Ensures that all sources power up properly and reliably output content for display.
- **Built-in web page allows for simple configurations and provides a choice of one Ethernet, RS-232, or IR control method of the display power.**
- **LinkLicense for WC Pro Control Processor provides several enhancements:**
  - Configuration using Extron Global Configurator Plus or Professional control system software
  - Support of TouchLink Pro touchpanels, network button panels, and secure platform devices
  - Managing, monitoring, and controlling AV devices using a standard Ethernet network
  - Library of Pro Series device drivers and modules for use with Global Configurator and ControlScript
  - LinkLicense for User Interfaces is an easy way for people to use their mobile devices or computers as primary control interfaces

- **One bidirectional RS-232 serial port** — Captive screw serial port that allows for control of one RS-232 device.
- **One IR port for one-way control of AV devices.**
- **Two digital I/O ports and one 24 V DC output port** — Provides easy and flexible installation with switches and sensors such as the Extron OCS 100.
- **PoE compatible** — Product can be powered directly by a PoE switch or injector, eliminating the need for a local power supply.
- **HDMI audio de-embedding** — Provides an analog audio output.
- **Front panel LEDs provide visual indications for power, active signal presence, connection, and communication.**
- **Compact metal enclosure** — One-inch high, 3/8 rack width designed for placement behind a display, above a projector or under a table.
- **Compatible with Extron mounting solutions and is shipped with the MBU 125.**
- **External Extron Everlast™ power supply optional, part #70-1174-01** — Provides worldwide power compatibility with high demonstrated reliability and low power consumption.
- **Network and Configuration Features:**
  - **Global compatibility** — The WC uses industry standard Ethernet communication protocols, including DHCP, DNS, HTTP, HTTPS, ICMP, NTP, SFTP, SMTP, SNMP, SSH, TCP/IP, and UDP/IP.
  - **Network connection** — The WC Pro 160 supports 10/100Base-T Ethernet communication.
  - **Remote equipment management** — The IP Link Pro connection via the LAN port on the WC Pro allows you to remotely manage, monitor, and control several Ethernet-enabled products such as projectors, cameras, video conferencing equipment, controllers, and other AV equipment. The WC provides support for the following:
    - TCP, UDP, and HTTP connections
    - Password protection using secure communication
    - Connection via IP address or host name
- **Multi-level password protection** — Allows security to be set based on user roles.

  NOTE: The factory configured passwords for all accounts on this device have been set to the device serial number. In the event of a complete system reset, the passwords convert to the default, which is `extron`.

- **System asset management** — The configured system and controller allow you to control, monitor, and schedule various functions of devices in the system.
- **E-mail notification** — The WC can be set up to send e-mail notifications, such as a notice that a projector has been disconnected or the projector lamp has been used for a designated number of hours.
- **Support for Extron ControlScript Pro xi**

PC System Requirements

To find the minimum hardware and software requirements for the PC used to configure the WC Pro 160:

- Go to the `Download` page (**www.extron.com/download/index.aspx**) on the Extron website and navigate to the web page for the specific software package (such as Global Configurator or ControlScript). Minimum system requirements are listed in the product description section of the page. In some cases, minimum device firmware version requirements are also listed there.
- If system requirements are not listed on the software package web page, contact an Extron support representative.

Application Diagrams

The following figures show examples of how the WC Pro 160 can be connected.

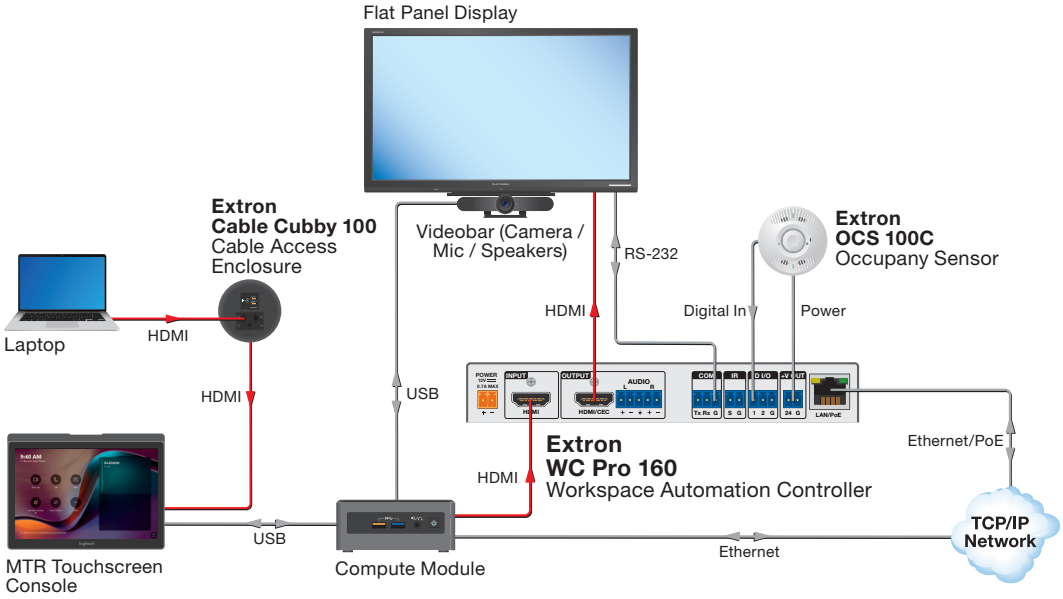

Figure 2. Typical Application of the WC Pro 160

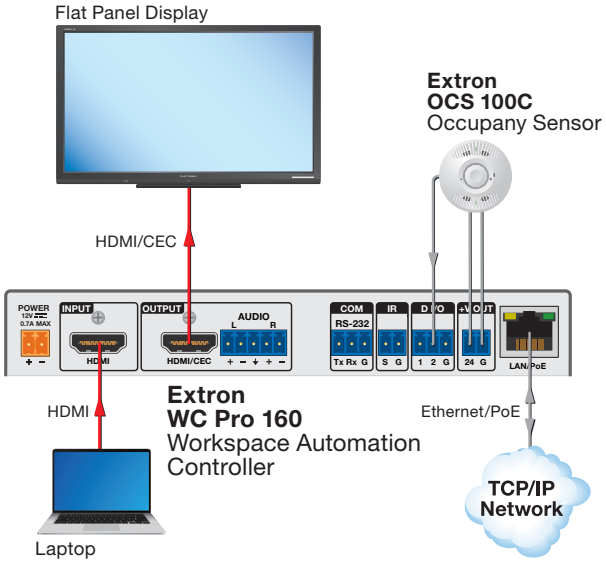

Figure 3. WC Pro 160 Basic Configuration

Configuration Procedure for the Controller

Pre-configured WC Pro 160

The WC Pro 160 is pre-configured and fully functional out of the box, using CEC commands for display control based on video signal and occupancy sensor detection. With this configuration, the controller detects video signals upon connection of an HDMI cable to the input, and the OCS 100 occupancy sensor detects room occupancy status. These are used as input events that can automate the space and turn the display or projector on and off via CEC (see **CEC Control** on page 18 for more information).

The product ships with a preloaded configuration that contains monitors and CEC actions:

- **Automatic Display Power ON Control** – Active signal detected.

  If a video signal is detected on the HDMI input, the `Power ON` CEC command is sent via the HDMI output to the display device.

- **Automatic Display Power OFF Control** – No signal detected.

  If no video signal is detected on the HDMI input, then the 'Power OFF' CEC command is sent via the HDMI output to the display/sink device.

- **Automatic Display Power ON Control** – Occupancy detected.
  If the Digital I/O #1 port is set to OFF (High), the `Power ON` CEC command is sent via the HDMI CEC output to the display device.

- **Automatic Display Power OFF Control** – No Occupancy detected.

  If the Digital I/O #1 port is set to ON (Low), the `Power OFF` CEC command is sent via the HDMI CEC output to the display device.

This factory configuration can be modified using the Internal Web Page. If the WC Pro 160 is reset, the device reverts to the factory out-of-box default web configuration with CEC display control.

Configuration of the WC Pro 160 Using the Internal Web Page

NOTE: A Universal Access Key is required to configure the WC Pro 160 using the internal web page. The unit cannot be configured with the internal web page if it is configured with Extron Global Configuration software or programmed with ControlScript. To obtain a Universal Access Key, go to **https://www.extron.com/myaccount/uak**. If an Insider account holder obtains a UAK file, it expires in 90 days. If a guest account holder obtains a UAK file, it expires in 7 days. After expiration, the user needs to obtain a new UAK file.

The WC Pro 160 workspace controller features internal web pages. Configure and monitor certain settings of the WC Pro device via a LAN connection. Use a web browser to view the pages on a PC or any other mobile device connected to the device LAN port or the same network. The internal web page provides configuration panels for the date and time, network connections, passwords, and firmware update. It also provides pages for EDID and display control, editable drop-down panels and buttons to backup, restore, reboot and reset the unit (see **Accessing the Internal Web Pages** on page 41).

Extron pre-loaded web-based automation drivers are available on the `Display Control` page. If a driver is needed that is not pre-loaded, the user can search and download a new or updated driver, then import it via the internal web pages. For Web-Based Automation Drivers, go to **https://www.extron.com/download/automation-drivers**.

Configuration Using Toolbelt Software

Extron Toolbelt software is a Windows® application created for the management and troubleshooting of Pro Series control systems. Toolbelt can be used to change device network settings, add an e-mail server, upload firmware, view trace messages, remotely reboot the WC Pro 160, and more. Devices on the network can be automatically discovered or manually added if desired. Toolbelt also provides information on WC Pro memory usage, device run time, author of the current project, and software version used (see the *Toolbelt Help File* for information on using the program).

Advanced Configuration Using LinkLicense

The addition of the LinkLicense for WC Pro Control Processor (sold separately) opens up advanced configuration via GCP software.

- An IR, RS-232, or Ethernet driver file can be downloaded from the extensive Extron driver selection from the Extron website (**www.extron.com/download/index.aspx**). The driver is saved to a folder and commands from the driver are incorporated into the GC configuration file for the controller. The configuration file is built and uploaded to the WC Pro 160 via GC.
- If a driver is not already available, RS-232 or Ethernet command strings can be entered directly from a host computer using Global Configurator. These can then be incorporated into controls within the GC project.

For supporting documentation, or if it becomes necessary to download the configuration again, go to the WC Pro 160 product page at **www.extron.com**.

About Global Configurator (with GC Professional and GC Plus Modes)

Global Configurator is the software tool for configuration of a WC Pro 160 controller. It does the following:

- Loads device drivers for monitoring the status of and controlling devices within the AV system.
- Creates the configuration containing all the settings for the controller and the products with which it interacts within the AV system.
- When the Extron LinkLicense for User Interface is enabled on the controller, Extron Control for web, iOS, or Android can be used with the WC Pro 160 to permit remote control of the unit and, by extension, the Extron and third-party equipment (such as controllers, projectors, displays, computer monitors, and DVD players) that the WC Pro 160 is configured to control.
- Provides access to Extron Toolbelt software.

To obtain Global Configurator (GC Professional, GC Plus) software, contact an Extron support representative for an Extron Insider account. Extron provides training to customers on how to use the software. Access to the features of Global Configurator Professional is available to users who successfully complete Extron Control Professional Certification.

About ControlScript Programming

For those who prefer to program control systems rather than configure them, Extron offers ControlScript programming as an alternative to Global Configurator. It encompasses ControlScript Deployment Utility (CSDU), and ControlScript Extension for VS Code. ControlScript programming is an integrated programming development environment for Extron control processors, user interfaces, network button panels, and expansion interfaces.

The programming environment includes the ControlScript API, as well as all of the tools for developing control system programs, such as file management, code editing, debugging and diagnostic tools.

Installation and Operation

This section covers the following:

- **Installation Step 1: Get Ready**
- **Installation Step 2: Mount or Place the Unit**
- **Installation Step 3: Cable Devices**
- **Installation Step 4: Set Up Network Communication**
- **Installation Step 5: Configure the WC Pro 160**
- **Installation Step 6: Test and Troubleshoot**
- **Front Panel Features**
- **Resetting the Unit**

Follow the installation steps in this guide or in the setup guide and use it for reference throughout the installation and configuration process.

Installation Step 1: Get Ready

Use the following procedure to prepare for the installation.

NOTE: If using the WC Pro 160 with the out of the box configuration or the internal web pages for configuration, skip to **Installation Step 2: Mount or Place the Unit** on page 8**.**

1. Download and install the latest version of the following from **www.extron.com**:
   - **Global Configurator Professional or Global Configurator Plus software** — For setting up and configuring the controller. GC includes a link to the **Toolbelt** software (also available as a standalone program) and a way to upgrade the firmware of the controller. You must have an Extron Insider account to use GC software (see **Locating Software, Firmware, and Driver Files on the Extron Website** on page 37).
   - **ControlScript Deployment Utility** (ControlScript Pro xi software) — For programming the control processor (as an alternative to GC).
   - **Toolbelt software** — For setting up the controller.
   - **IP Link Pro device drivers** — For use with GC (Professional or Plus), to make control of other devices possible.
   - **LinkLicense files** — For use with GC (Professional or Plus) for configuration.
   - **Web-based automation drivers** — Go to **www.extron.com/download/automation-drivers**.

   All are available from **www.extron.com**.
2. Obtain network information for the unit from the network administrator. The following details for each IP Link Pro device such as the WC Pro 160 are needed:
   - DHCP setting (on or off)
   - WC Pro 160 IP address
   - Subnet mask
   - Gateway IP address
   - User name
   - Passwords

   NOTE: The factory configured passwords for all accounts on this device have been set to the device serial number. In the event of a complete system reset, the passwords convert to the default, which is **`extron`**.
3. Write down the MAC address of the WC Pro 160 to be used.
4. Obtain model names and setup information for devices the WC Pro 160 will control.

Installation Step 2: Mount or Place the Unit

The WC Pro 160 can be mounted on a wall or under a desk, table, or podium using the Extron MBU 125 under-desk mounting kit, provided with the unit. Additional mounting kits and instructions are available at **www.extron.com**.

NOTE: To wall-mount the WC Pro 160, place the bottom panel of the unit against the wall.

UL Guidelines for Rack Mounting

The following Underwriters Laboratories (UL) guidelines pertain to the safe installation of the WC Pro 160 in a rack:

CAUTION:

- **Elevated operating ambient temperature** — If the equipment is installed in a closed or multi-unit rack assembly, the operating ambient temperature of the rack environment may be greater than room ambient temperature. Therefore, install the equipment in an environment compatible with the maximum ambient temperature (+104 °F, +40 °C) specified by Extron.
- **Reduced air flow** — Install the equipment in a rack so that the amount of air flow required for safe operation of the equipment is not compromised.
- **Mechanical loading** — When mounting the equipment in the rack, ensure that uneven mechanical loading does not cause a hazardous condition.
- **Circuit overloading** — When connecting the equipment to the supply circuit, consider the effect that circuit overloading might have on overcurrent protection and supply wiring. Consider equipment nameplate ratings when addressing this concern.
- **Reliable earthing (grounding)** — Maintain reliable grounding of rack-mounted equipment. Pay particular attention to supply connections other than direct connections to the branch circuit (for example, use of power strips).

Consignes UL pour le montage en rack

Les consignes UL (« Underwriters Laboratories ») suivantes concernent l'installation en rack d'un boîtier WC Pro 160 :

ATTENTION :

- **Température ambiante élevée** — En cas d'installation de l'équipement dans un rack fermé ou composé de plusieurs unités, la température du rack peut être supérieure à la température ambiante. Par conséquent, il est préférable d'installer l'équipement dans un environnement qui respecte la température ambiante maximale (TMA) spécifiée par Extron.
- **Réduction du flux d'air** — Si l'équipement est installé dans un rack, veillez à ce que le flux d'air nécessaire pour un fonctionnement sécurisé de l'équipement soit respecté.
- **Charge mécanique** — Installez l'équipement en rack de manière à éviter toute situation dangereuse causée par le déséquilibre de la charge mécanique.
- **Surcharge électrique** — Lorsque vous connectez l'équipement au circuit d'alimentation, observez la connexion de l'équipement et étudiez les effets possibles d'une surcharge du circuit sur les protections contre les surintensités et les conducteurs d'alimentation. Consultez à cet égard les indications de la plaque d'identification de l'équipement.
- **Mise à la terre** — Assurez-vous que l'équipement est correctement mis à la terre. Accordez une attention particulière aux connexions électriques autres que les connexions directes au circuit de dérivation (ex. : les multiprises).

ATTENTION:
• Installation and service must be performed by authorized personnel only. • L'installation et l'entretien doivent être effectués uniquement par un technician qualifié.
• If the controller will be installed into fine furniture, it is best to hire a licenced, bonded craftsperson to cut the access hole and perform the physical installation so the surface will not be damaged. • S'il est prévu d'installer le contrôleur dans du beau mobilier, il est préférable de faire appel à un artisan autorisé et qualifié pour couper le trou d'accès et réaliser l'installation de telle façon que la surface ne soit pas endommagée.
• Follow all national and local building and electrical codes that apply to the installation site. • Respectez tous les codes électriques et du bâtiment, nationaux et locaux, qui s'appliquent au site de l'installation.

Accessibility and Americans with Disabilities Act (ADA) Compliance

When planning where to install the WC Pro 160, consider factors affecting accessibility of the controller such as height from the floor, distance from obstructions, and how far a user must reach to insert a connector. For guidelines, see sections 307 ("Protruding Objects") and 308 ("Reach Ranges") of the *2010 ADA Standards for Accessible Design* available at **https://archive.ada.gov/regs2010/2010ADAStandards/2010ADAStandards.pdf**.

Installation Step 3: Cable Devices

1. Cable devices to the controller (see figure 4 for connector locations).
2. Connect power cords and power on all the devices.

Rear Panel Features

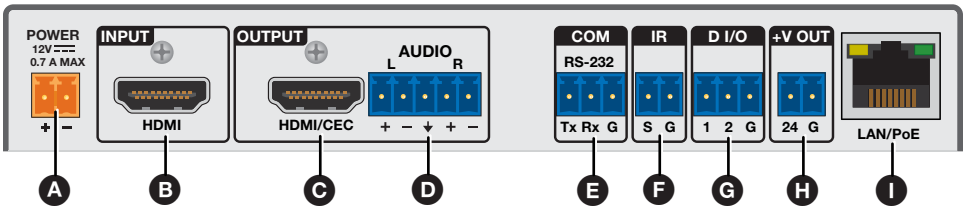

A Power connector
B HDMI input connector
C HDMI/CEC output connector
D Audio output connector
E RS-232 COM control port
F IR control port
G Digital input and output ports
H +V OUT output
I LAN/PoE port

Figure 4. WC PRO 160 Rear Panel

A Power connector — (Optional) Connect a 12 VDC, 0.7 A maximum power supply to this 2-pole captive screw connector (can be an alternative to PoE).

B HDMI input connector — Connect an HDMI source to this female HDMI connector.

C **HDMI/CEC output connector** — (See **figure 4** on page 9) Connect an HDMI display to this female HDMI with CEC pass-through port to enable the controller to turn the display on when the WC PRO 160 detects an input signal, and off when the signal is no longer detected.

Through this port, the controller can send pre-loaded CEC commands to the connected HDMI output device. If an HDMI display and an occupancy sensor are connected, the WC Pro automatically issues CEC display power On and Off commands through the HDMI/CEC output port when the connected sensor detects motion in the room.

NOTE: It can take up to 2 minutes after powering up the WC Pro 160 to initiate CEC display control.

(See **CEC Control** on page 18 for more information.)

HDMI Input and Output Connectors:

WC PRO 160 has one HDMI input and one HDMI/CEC output connector. Both connectors support resolutions up to 4K (4096 x 2016) @ 60 Hz.

- Using Extron Ultra Series HDMI cables, the controller supports signal equalization of the TMDS signal for a cable length of up to 12 feet (3.6 meters).
- Using Extron Pro Series HDMI cables, the controller supports equalization for a cable length of up to 25 feet (7.6 meters). If you are using an Extron HD 4K 101 Plus cable equalizer (see **www.extron.com** for more information), cable lengths can be up to 35 feet (10.7 meters), at 4K resolution and with Extron HDMI pro cables.

HDMI LockIt Plus Cable Lacing Brackets:

The Extron LockIt Plus lacing bracket secures a standard HDMI cable to most HDMI devices.

NOTE: The HDMI device must have an HDMI connection mounting screw for this bracket to be used.

Follow these instructions to secure the HDMI connectors to the unit with the provided LockIt Plus lacing brackets:

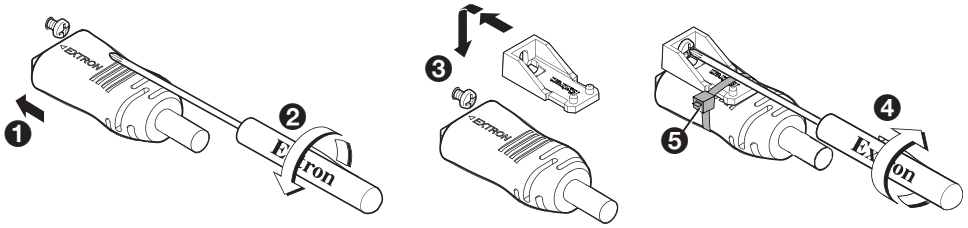

Figure 5. LockIt Plus Installation Diagram

❶ **Plug in the cable** – Connect the HDMI cable to the HDMI port.

❷ **Loosen the screw** – Slightly loosen the mounting screw (do not remove it).

❸ **Attach the bracket** – Place the bracket over the screw

❹ **Tighten the the connector mounting screw** – Do not overtighten the screw.

❺ **Secure the cable** – Tighten the tie wrap around the connector and bracket, and cut off the extra length.

ATTENTION:

- Do not overtighten the HDMI connection mounting screw. The shield to which it is fastened is very thin and can easily be stripped.
- Ne serrez pas trop la vis de montage du connecteur HDMI. Le blindage auquel elle est attachée est très fin et peut facilement être dénudé.

D **Audio output connector** — (See **figure 4** on page 9) Connect powered speakers or an amplifier to this 5-pole captive screw connector for de-embedded balanced or unbalanced analog output.

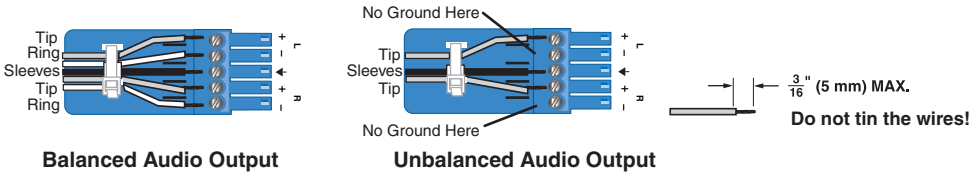

Figure 6. Wiring for Audio Output

E **RS-232 COM control port** — Connect Tx, Rx, and G (ground) pins of this port to the serial port of a display to enable bidirectional communication and control.

> **NOTE:** STP 20-2P cables are recommended for these connections (see the image below, right).

WC Pro 160 Serial protocol:

- 300 to 115200 baud (9600 baud is default)
- 8 (default) or 7 data bits
- 1 (default) or 2 stop bits
- No parity (default), even, or odd parity
- Flow control support (default is none): software-only (XON, XOFF)
- Use the diagram in figure 7 as a wiring guide to cable the controller to other devices.

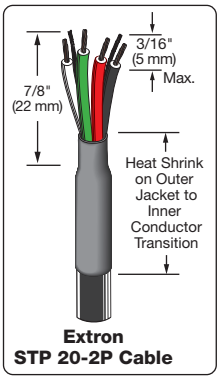

> **TIP:** STP 20-2P cable, shown at left, is recommended for these connections. For best results, insulate the common or drain wires using heat shrink.

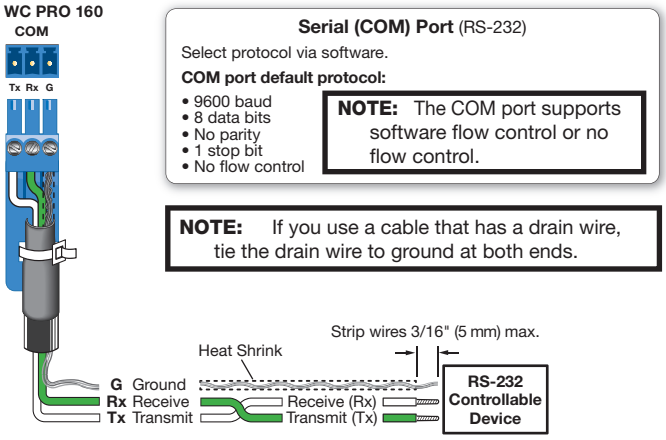

Figure 7. Wiring COM Ports for Serial Control

For bidirectional serial communication, the transmit, ground, and receive pins must be wired at both the controller and the other device. Each projector or other device may require different wiring. For details, see the manual for that device or read the Extron device driver communication sheet, included with the drivers.

> **NOTE:** Maximum distances between the WC Pro 160 and the device being controlled may vary up to 200 feet (61 meters). Factors such as cable gauge, baud rates, environment, and output levels (from the WC Pro 160 and the device being controlled) all affect transmission distance.

F **IR control port** — (See **figure 4** on page 9) To control devices via infrared (IR) commands from the WC PRO 160, connect a single or dual IR emitter to this port, with a maximum of 100 feet (30 meters) distance from port to emitter. The IR port provides unidirectional IR signal output to control a display (see figure 8).

> **NOTE:** When two single IR emitters are wired to this port, the emitters must be wired in series. Parallel configurations of single IR emitters are not supported.

Connect the port directly to the wired IR port of another device, or insert the wires from one or two IR emitters into this IR port and place the heads of the emitters over or next to the IR signal pickup windows of the devices. For wiring, see the following diagrams or the *IR Emitter Installation Guide* (available at **www.extron.com**).

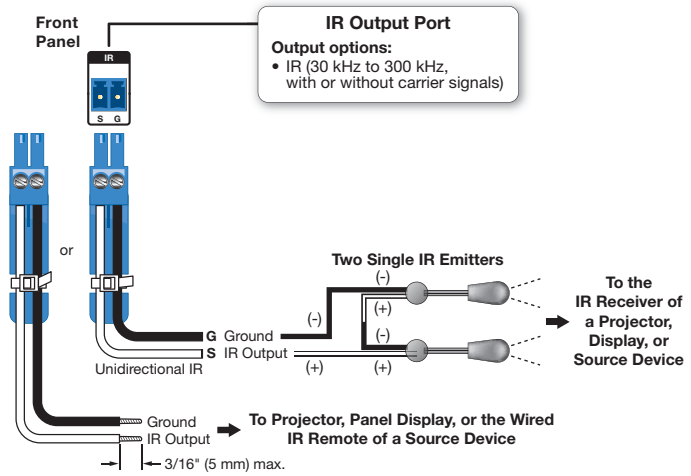

Figure 8. Wiring the IR Port

> **NOTE:** Each emitter must be within 100 feet (30 meters) of the controller for best results.

Single Emitter

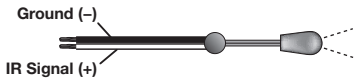

One Single IR Emitter

Dual Emitter

Dual IR Emitter

Figure 9. Installing One Single or One Dual Emitter

Two Single Emitters

When installing only single emitters, tie them **in series** as shown below.

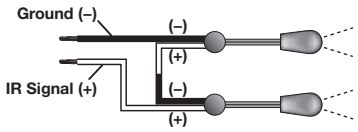

Two Single IR Emitters

Figure 10. Installing Two Single Emitters

G **Digital input and output ports** — (See **figure 13** on page 15) The D I/O ports are software configurable for four modes: input, input with pull-up, output, and output with pull-up. They support two digital inputs or outputs plus a ground pin.

> **NOTES:**
> - If the digital output port is set with pull-up disabled, the voltage output is set by an external source.
> - If the pull-up resistor is enabled, the voltage output is equal to approximately +4.6 V.

- **Digital input** — Connect a sensor, such as a room occupancy sensor, or a switch, such as a push-button device that can be configured to be triggered by a press or release of the button.

  On the web configuration page, digital input 1 can be configured to detect an occupancy control signal from an OCS 100. If an HDMI display and an occupancy sensor are connected, the WC Pro automatically issues CEC display power On and Off commands through the HDMI/CEC output port when the connected sensor detects motion in the room. The feature can be toggled via the web configuration pages for display control power settings (see **Display Control Page** on page 47).

  > **NOTE:** The WC Pro 160 is shipped with digital input 1 configured to receive occupancy sensor control signals (0 to 24 VDC). Configuration of this feature can be done via the internal web pages (see **Power Settings tab** on page 50).

- **Digital output** — Use as a digital output to control LEDs or other devices that accept a transistor-to-transistor logic (TTL) signal. They can also provide contact closure control for projector lifts, motorized screens, or room and light switches (see **Connecting to the Digital I/O Ports** on page 15 for cabling and protocol).

H **+V OUT output** — (Optional) If using an occupancy sensor or other device that requires + 24 V power and does not have a power supply, wire its power connector to the rear panel +V OUT connector (see figure 11 for an example of this connection).

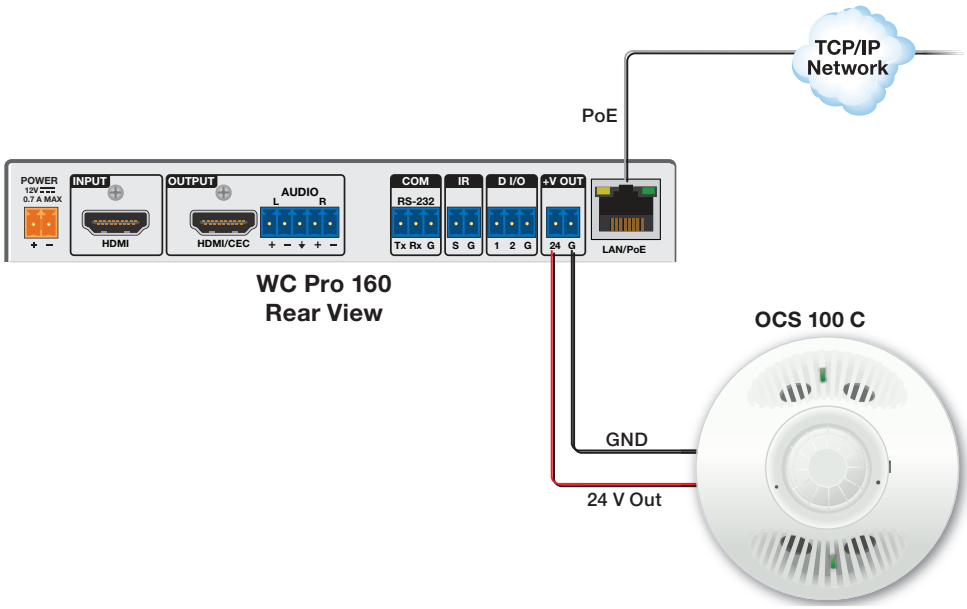

Figure 11. +V Out (24 VDC) Connection to an OCS 100C Sensor

I **LAN/PoE port** — (See figure 12) Connect the controller to a network via the LAN port for remote monitoring and configuration of the system, to control an Ethernet-enabled product, or to power the controller (see figure 12 for cabling and protocol).

The WC Pro controller accepts Power over Ethernet (PoE) through the LAN port.

ATTENTION:

- Power over Ethernet (PoE) is intended for indoor use only. It is to be connected only to networks or circuits that are not routed to the outside plant or building.
- L'alimentation via Ethernet (PoE) est destinée à une utilisation en intérieur uniquement. Elle doit être connectée seulement à des réseaux ou des circuits qui ne sont pas routés au réseau ou au bâtiment extérieur.

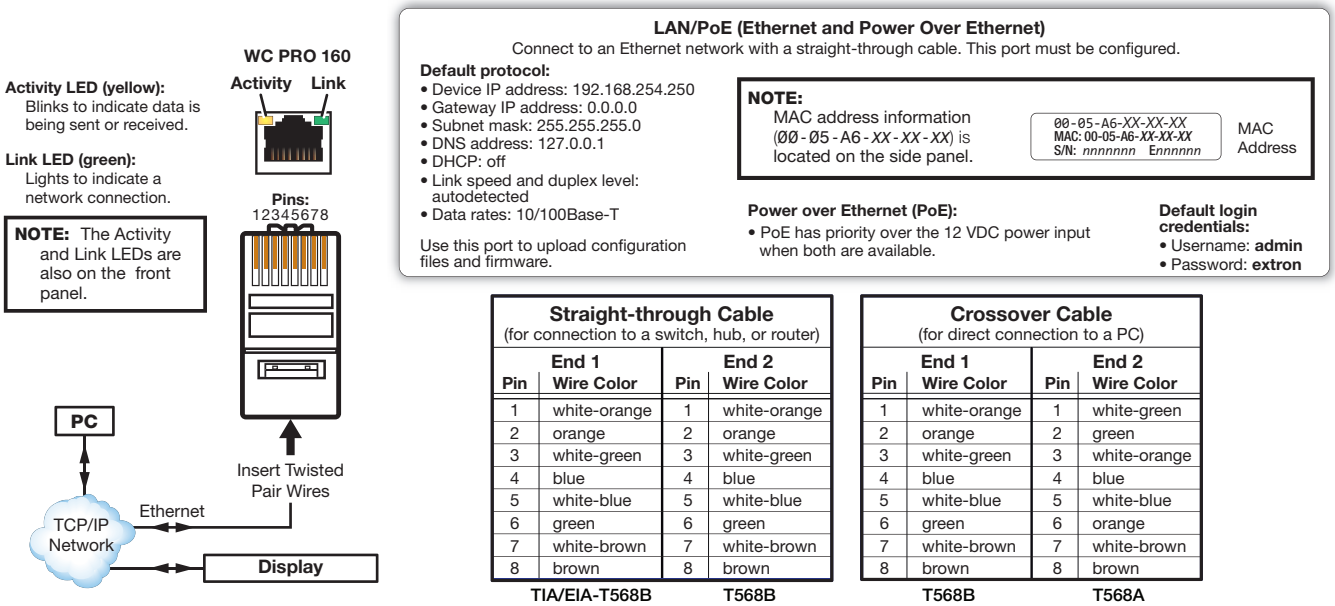

Straight-through Cable
(for connection to a switch, hub, or router)

End 1 Pin	End 1 Wire Color	End 2 Pin	End 2 Wire Color
1	white-orange	1	white-orange
2	orange	2	orange
3	white-green	3	white-green
4	blue	4	blue
5	white-blue	5	white-blue
6	green	6	green
7	white-brown	7	white-brown
8	brown	8	brown
TIA/EIA-T568B		T568B	

Crossover Cable
(for direct connection to a PC)

End 1 Pin	End 1 Wire Color	End 2 Pin	End 2 Wire Color
1	white-orange	1	white-green
2	orange	2	green
3	white-green	3	white-orange
4	blue	4	blue
5	white-blue	5	white-blue
6	green	6	orange
7	white-brown	7	white-brown
8	brown	8	brown
T568B		T568A	

Figure 12. LAN Connector and LEDs

NOTE: DHCP is off by default.

Cabling:

- For 10Base-T (10 Mbps) networks, use a CAT 3 or better cable.
- For 100Base-T (maximum 155 Mbps, all models) networks, use a CAT 5 or higher cable.

Back panel LEDs:

- **Activity LED** — This yellow LED blinks to indicate network activity.
- **Link LED** — This green LED lights to indicate a good network connection.

Front panel LAN LEDs:

These LEDs correspond with the back panel LEDs.

- 100 green LED — Indicates a 100Base-T network connection.
- Link green LED — Network is active.
- Act yellow LED — Data is being sent and received.

MAC address:

This is the unique user hardware ID number (MAC address) of the unit (for example, `00-05-A6-05-1C-A0`). This address may be needed during configuration. The label is on the side panel.

Connecting to the Digital I/O Ports

Connect a switch, sensor, LED, relay contact, or similar item to these ports (see figure 13). Each I/O port provides 250 mA, maximum.

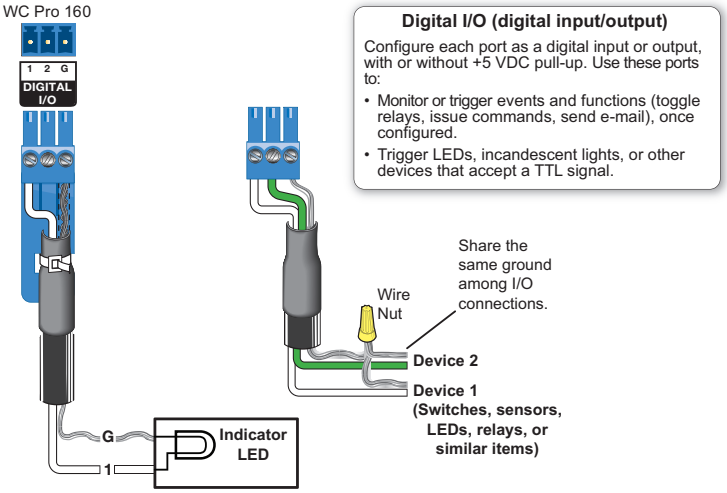

Figure 13. Digital Input Port Wiring

Digital input

To allow the controller to monitor external devices, connect a switch, motion sensor, tally feedback output, button pad, or a similar item to a digital input port and configure the port. The port is set to measure two states: high and low. The port accepts 0 to 24 VDC input.

Threshold voltages are **not** adjustable. The thresholds are:

- < **2.0** VDC — port on, logic low
- > **2.8** VDC — port off, logic high

There is also an internal, selectable, +5 VDC pull-up resistor for this circuit, which can be used if the connected device does not provide its own power. The port accepts 250 mA, maximum.

- Digital input with pull-up disabled:
  - Digital input is triggered by an external switch or voltage between the digital input pin and ground.
  - Figure 14 shows an example application, digital input without pull-up: occupancy sensor connection.

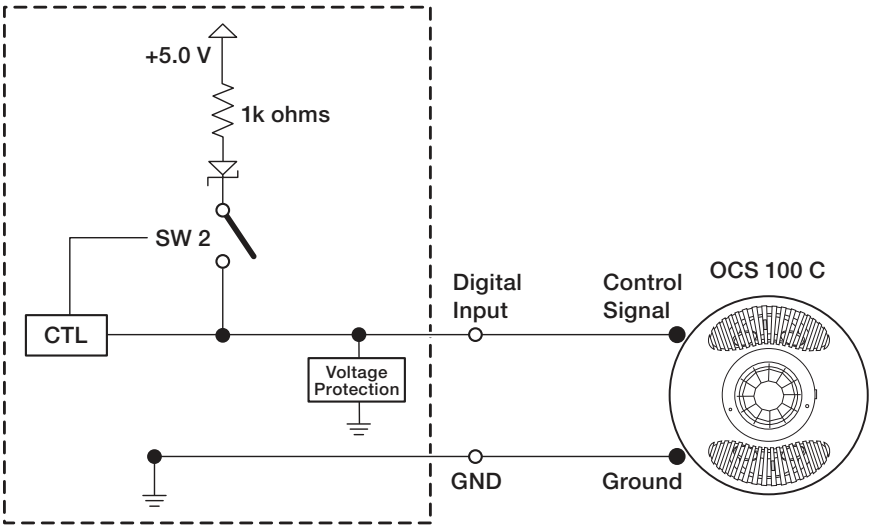

Figure 14. Occupancy Sensor, without Pull-up

In this example:

- Room occupied: digital input is +2.8 to 24 VDC, logic high.
- Room unoccupied: digital input is 0 VDC, logic low

NOTE: Occupancy sensors typically supply +24 VDC (logic high) when occupancy is detected. After a set time with no occupancy, the sensor supplies *0* VDC (logic low).

- Digital input with pull-up enabled
  - The +5.0 VDC pull-up resistor is enabled (switch 2 is closed when configured for pull-up).
  - An external short to ground creates a logic low.
  - An open circuit creates a logic high.
- Figure 15 shows an example application, digital input with pull-up: connecting a two-position switch.

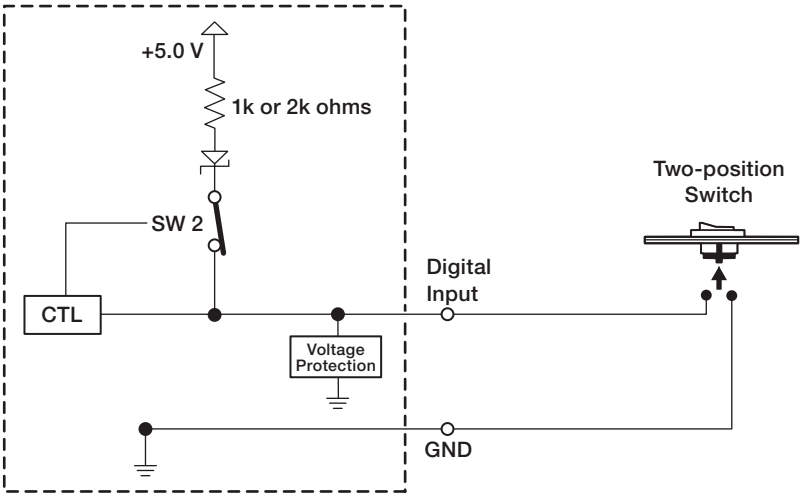

Figure 15. Two-position Switch with Pull-up

- Two-position switch is open: digital input is +5 VDC, logic high.
- Two-position switch is closed: digital input is 0 VDC, logic low.

Digital output

To activate LEDs, incandescent lights, or other devices that accept a TTL signal, or to provide contact closure control for projector lifts, motorized screens, room or light switches via an Extron IPA T RLY4 or similar device, use this port as a digital output. When a port is configured for digital output, it offers two output states: On and Off.

- When the port is set to an On state, (the switch 1 circuit is closed), the I/O pin is connected to ground. Output voltage is less than 0.5 volts.
- When the port is set to the Off state (the switch 1 circuit is open), the output pin floats (is not connected).
- If the application calls for TTL compatibility, the digital output circuit can be set up to provide a 1k or 2k ohm pull-up resistor to +5 VDC, which you can use if the connected device does not provide its own power.
  - If the pull-up resistor is disabled, voltage output is determined by an external source device.
  - If the pull-up resistor is enabled, switch 2 is closed, voltage output is 4.3 VDC.
- Digital output with pull-up disabled:
  - When switch 1 closes, the port is on.
  - When switch 1 opens, the port is off.
  - **Figure 16** on page 17 shows an example application of digital output without pull-up: connecting an LED and an external +5 VDC power source.

This application often requires a current-limiting resistor, as shown in the diagram below. Many button switches that contain LEDs have a resistor built in. See the guide for the lighted switch or stand-alone LED for details.

NOTE: Each I/O pin can sink a maximum of 250 mA.

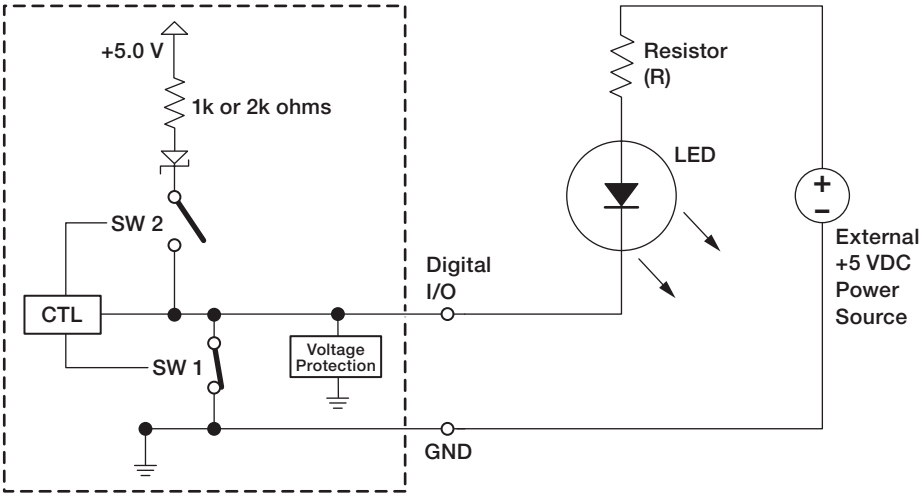

Figure 16. Digital Output Application: LED and External +5 VDC Power Source Without Pull-up

To determine the value of the current limiting resistor in the circuit shown above, you need to know the values of three variables:

i = LED forward current in amps (found in the data sheet for the LED)

V_f = LED forward voltage drop in volts (found in the data sheet for the LED)

V_s = supply voltage of the external voltage source

Insert those values into the following equation to determine the resistor value:

$$R = \frac{V_s - V_f}{i}$$

Calculation example:

$$\left.\begin{array}{l} i = 5\text{mA } (0.005\text{ A}) \\ V_f = 2\text{ V} \\ V_s = 5\text{ V} \end{array}\right\} \quad R = \frac{V_s - V_f}{i} = \frac{5\text{ V} - 2\text{ V}}{0.005\text{ A}} = 600\text{ ohms}$$

NOTE: If the value calculated for the current limiting resistor is not a standard resistor value, you can round up the number to the next highest common resistance value.

- The connected LED is off when the port and switch 1 are open.
- The connected LED is on when the port and switch 1 are closed.

- Digital output with pull-up enabled:
  - When the port is configured for pull-up, switch 2 is closed, activating the +5.0 VDC pull-up resistor.
  - When switch 1 closes, the port is on.
  - When switch 1 opens, the port is off.
  - Figure 17 shows an example application of digital output with pull-up: controlling another device via its contact closure input port.

Connect the digital I/O port to the contact input port of another device, such as an Extron DTP transmitter. When activated, the digital output port momentarily shorts pin 1 to ground (pulsed contact for 0.5 seconds), closes switch 1, which selects the input on the connected device.

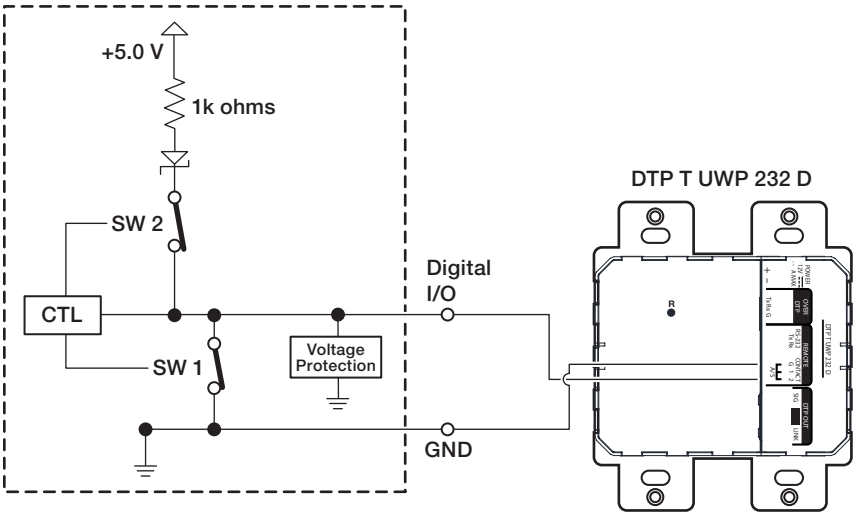

Figure 17. Digital Output Application With Pull-up: Contact Closure Input Selection on a Connected Device

CEC Control

Consumer Electronics Control (CEC) is an industry standard for control functions provided by HDMI. CEC control functions are incorporated into the WC Pro 160 and into GC software and ControlScript to control other equipment. HDMI CEC implementations vary by manufacturer and by their equipment.

Extron has tested a representative sample of equipment from other manufacturers to ensure that power on and off commands work with most devices that conform to the HDMI CEC standard. However, CEC inter-operation between the WC and equipment from other manufacturers cannot be guaranteed. Volume and audio mute commands may or may not be supported by any given display. See the manual for the device that you want the WC to control to determine the details of the HDMI CEC functions for that product, and see the release notes for the Extron Universal Display Driver - HDMI CEC.

TIP:

- If your display device does not support CEC commands or does not support a full implementation of them, use one of the other control options available in the WC, such as RS-232, IR, or Ethernet control.
- Some displays must be configured to enable CEC communication.

Automatic display power control

The WC Pro 160 can automatically turn display or projector power on or off based on the HDMI input connector detecting a signal, and the OCS 100 occupancy sensor detecting room occupancy. The system uses CEC driver commands sent to the display or projector to turn power on or off.

WC Pro 160 is shipped with basic CEC control built into the default configuration. Basic CEC controls in that configuration work out of the box, but can be further customized using Global Configurator software or ControlScript.

The CEC port configuration can specify whether or when to send a power command, and to specify whether to send other CEC commands. See the *Global Configurator Help File* for more detailed information on the port and on macros.

NOTES:

- If you need additional control options, use Global Configurator to fully customize the system to configure display control using Ethernet, RS-232 serial, CEC, or IR control.
- By default the WC Pro 160 is shipped with a web-based configuration and assigned CEC display driver. If a different configuration (web-based or GCP) is subsequently applied, performing a **Reset to Factory Defaults** (see page 26) replaces the current configuration with the default web-based one.

Supported CEC commands

CEC commands are derived from the CEC driver file, configured in Global Configurator or included in the factory-installed configuration, and then stored within the WC. Actions configured in Global Configurator tell the WC to send CEC commands to the HDMI output.

For more information, see the communication sheet for the Extron Universal Display Driver for HDMI and CEC, available on the `Drivers` download page at **www.extron.com**.

To view a list of the CEC commands currently supported in the WC Pro 160 driver:

1. Go to **www.extron.com** and click the **`Download`** tab (see figure 18, ❶).
2. In the left panel, click **`Control System Drivers`** (❷).
3. On the `Control System Drivers` page, select **`WC Pro w/LinkLicense for WC Pro Control Processor`** from the `Extron Product` drop-down list (❸). Alternatively, enter `CEC` in the **`Search Keywords`** field.
4. Select **`CEC`** from the `Protocol Type` drop-down list (❹).
5. On the line beside the **`Extron - Universal Display Drivers`**, **`HDMI CEC`** link, click the link under `Communication Sheet` (❺) to display information about the CEC driver, including all supported commands.

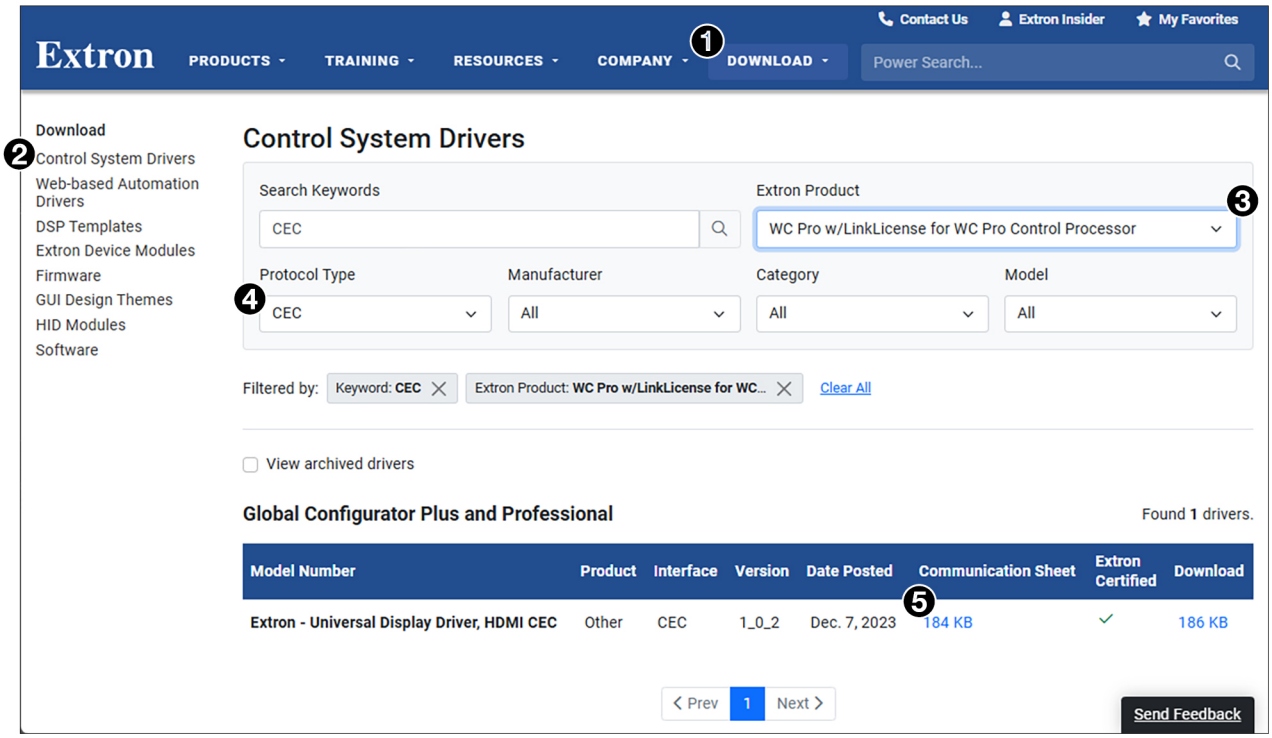

Figure 18. Control System Drivers Download Page

Connection examples for display control

This section contains examples of connection methods for display control.

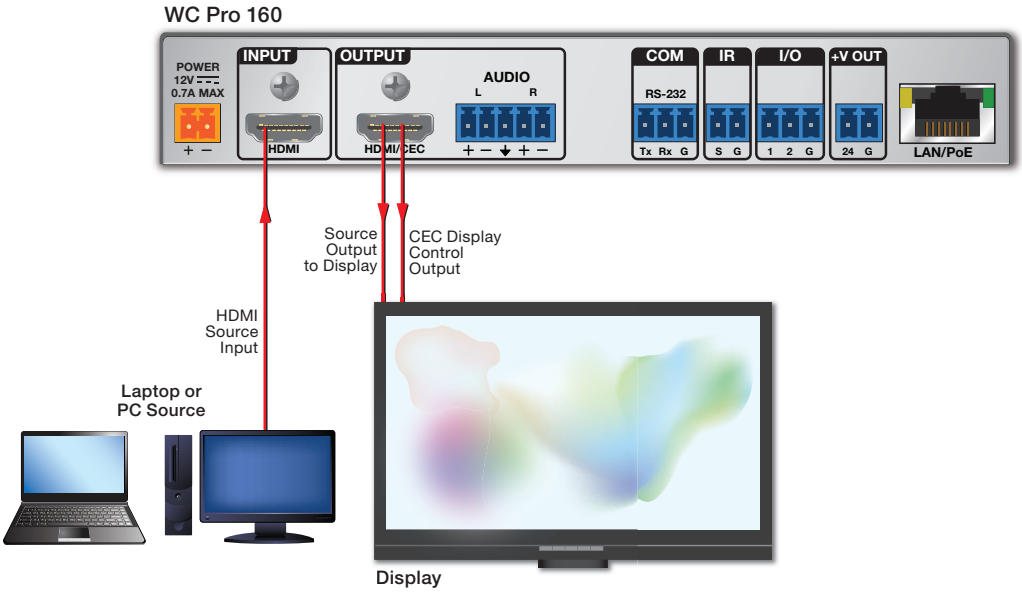

Figure 19. Display Control via HDMI Input to HDMI CEC Output

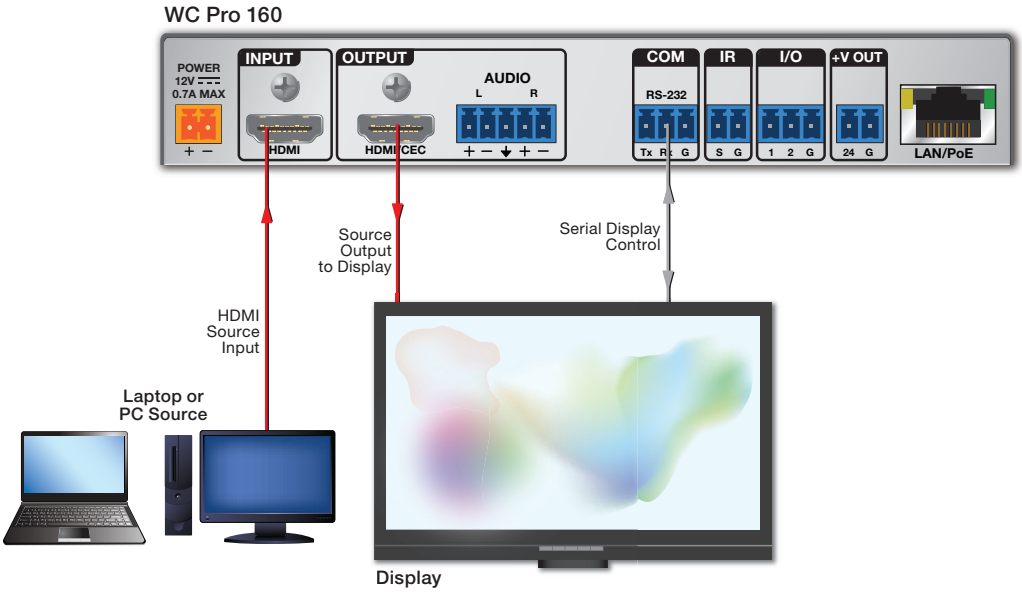

Figure 20. Display Control via HDMI Input to Serial RS-232 Output

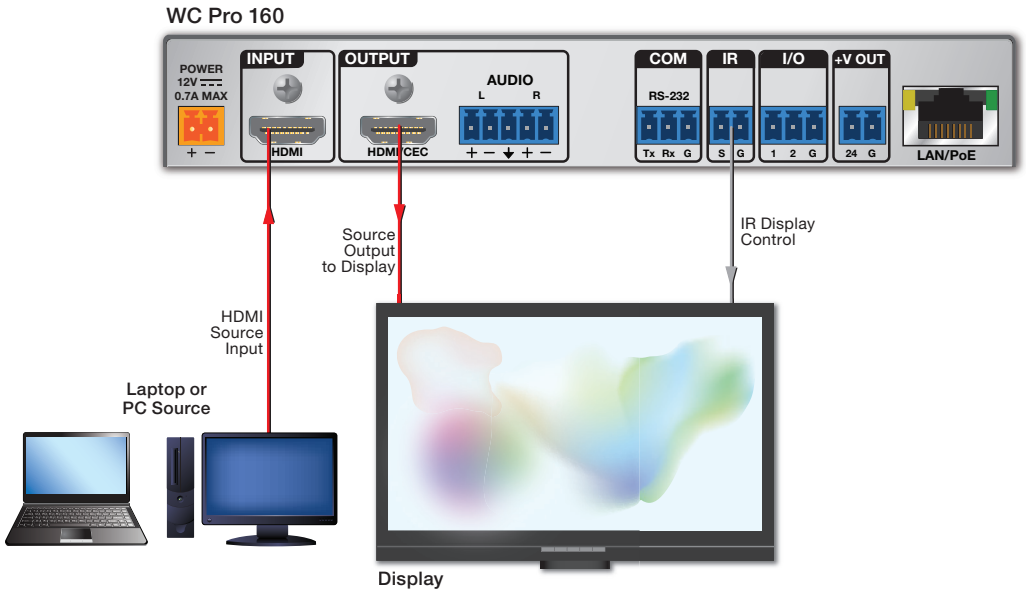

Figure 21. Display Control via HDMI Input to IR Output

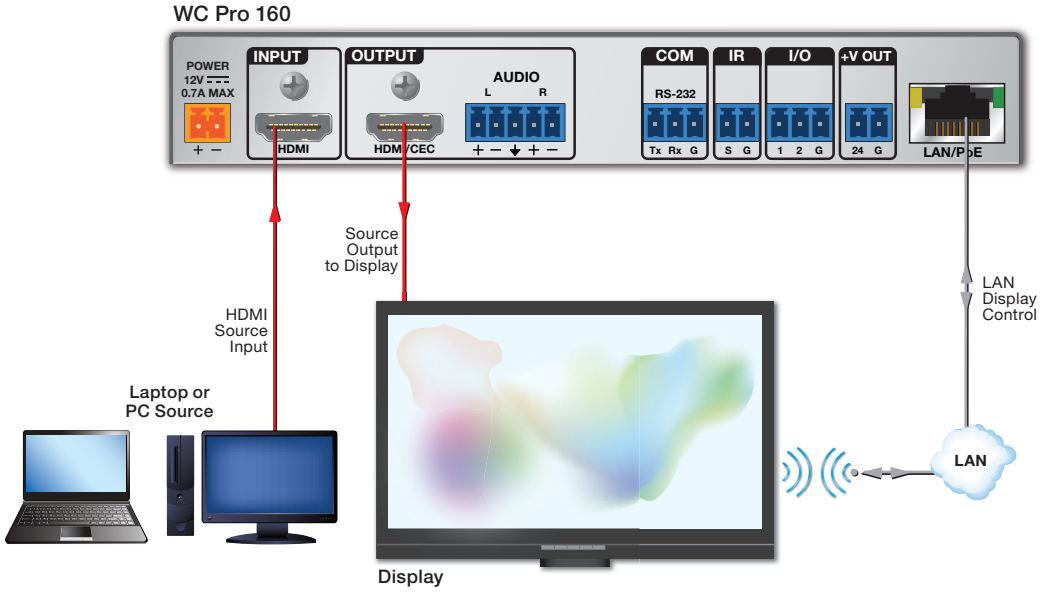

Figure 22. Display Control via HDMI Input to Ethernet Output

Installation Step 4: Set Up Network Communication

1. Connect the PC used for setup and the WC Pro 160 to the same Ethernet subnetwork. For LAN connections for the WC Pro 160, see **figure 12** on page 14.
2. Configure network settings. Network setup is essential prior to configuration. To set the unit IP address, use one of the following methods:
   - Use the internal web pages to set the IP address, subnet, gateway IP address, DHCP status, and related settings (see **Internal Web Pages** starting on page 41).
   - To identify the IP address without using Extron software, do either of the following.
     - Use the default IP address (`192.168.254.250`).
     - Enable DHCP using the **`Reset`** button (see **Enable or Disable DHCP** on page 41).

       NOTE: When setting up DHCP during network configuration or if using a host name instead of an IP address during project recovery, you must enter a qualified host name (*`hostname.domain.com`*). For example: `somename.somedomain.com`.
   - Use the WC Pro hostname to access the web page as follows:
     a. Enable DHCP using the **`Reset`** button (see **Enable or Disable DHCP**). (From the factory, DHCP is disabled, with a static IP address.)

     b. When DHCP is enabled and the device is connected to the network, enter the host name URL into a web browser window.

     The Extron default hostname is the product model name followed by last six digits of MAC address. For example, `WC-PRO-160-`*`xx-xx-xx`* for the base model, or `WC-PRO-160-with-LinkLicense-`*`xx-xx-xx`* for the device with LinkLicense.
   - Download and install PCS on the computer. PCS can be used to find a new device for network settings and to configure AV settings on the WC Pro 160.
   - Use Toolbelt (stand-alone or via GC) to set the IP address, subnet, gateway IP address, DHCP status, and related settings. Use the flowchart at right as a guide to setting up the controller for network use.

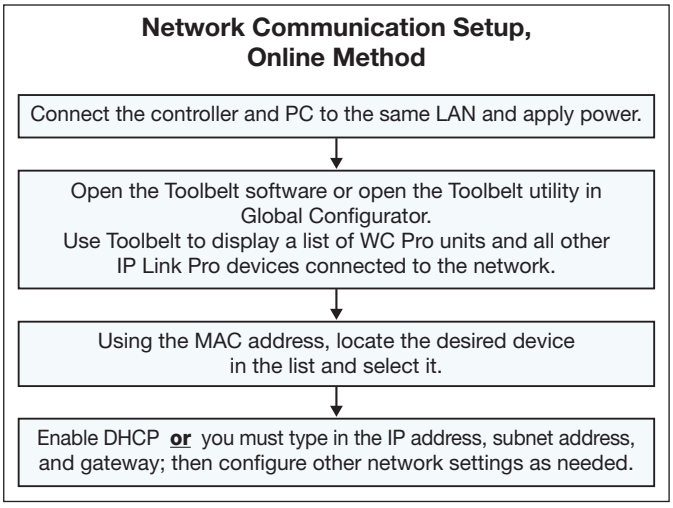

Figure 23. Network Communication Setup Flowchart

Installation Step 5: Configure the WC Pro 160

- **Using the web pages** — The user can configure and monitor settings of the WC Pro via a LAN connection. Use a web browser to view the pages on a PC or any other mobile device connected to the device LAN port or the same network. The internal web page provides configuration panels for the date and time, network connections, passwords, and firmware update, and pages for sensor and display control, editable drop-down panels and buttons to backup, restore, reboot and reset the unit. For simple configuration of the WC Pro, use the web pages (see **Internal Web Pages** starting on page 41).
- **Using Extron PCS** — This software package can be used for optional AV configuration.
- **Using Extron Global Configurator®** — For advanced software configuration use Extron Global Configurator (Global Configurator Professional [GC Professional] or Global Configurator Plus [GC Plus]). These software packages requires the appropriate LinkLicense to download and use (see **Advanced Configuration Using LinkLicense** on page 6).

  Configuring using Global Configurator:

  The most basic steps are outlined below in the recommended order. See the *Global Configurator Help File* as needed for step-by-step instructions and detailed information.

  1. Using GC, create a new GC Plus or GC Professional project and configure the controller and any installed IP Link Pro devices. The configuration tells the controller how its ports function, how to control other products, what to monitor, when to do things, and whom to notify, how, and under what circumstances.
     a. Configure ports on the controller.
        - Select device drivers and link them to each assigned HDMI CEC, serial, IR, or Ethernet port.
        - Configure settings (serial protocol, digital input and output, and Ethernet control settings) as needed.
     b. Set up monitors, schedules, macros, and local variables.
  2. Save the project.
  3. Build and upload the system configuration to the controller.

  To configure using Toolbelt, see the *Toolbelt Help File*.
- **Using ControlScript** — If desired, as an alternative to configuring with GC, program the controller using ControlScript (see the *ControlScript Deployment Utility Help File*).

The software applications are available at **www.extron.com**. See the software program help file for instructions on configuring the WC Pro 160.

Installation Step 6: Test and Troubleshoot

1. Test the system.

   If the controller is connected to a network, ensure that the yellow Activity LED and green Link LED on the LAN/PoE port light.
2. Adjust wiring or configuration as needed. Remember that, if the unit is mounted to a wall behind the display, the rear panel ports may not be accessible after the controller is mounted.

Front Panel Features

The WC Pro 160 front panel contains the recessed **`Reset`** button and seven sets of LEDs indicating the status of components of the unit.

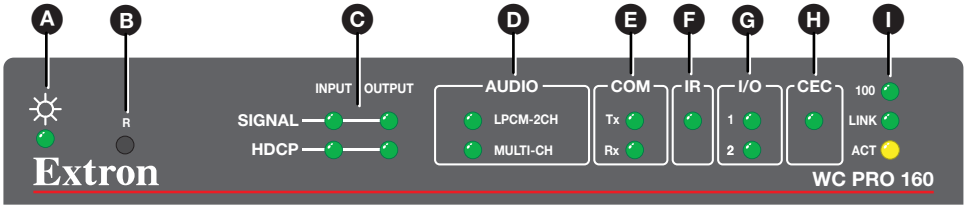

A Power and Reset LED	**D Audio LEDs**	**G Digital I/O LEDs**
B Reset button	**E RS-232 COM LEDs**	**H CEC LED**
C Input and output LEDs	**F IR LED**	**I LAN LEDs**

Figure 24. Front Panel

A Power and Reset LED — This green LED blinks while the unit is booting up, and lights steadily when the unit is powered on. It also blinks to indicate the reset mode.

B Reset button — Using a stylus or a small screwdriver such as an Extron Tweeker, press this button to select the reset mode. The green LED blinks depending on the selected reset mode (see the **Reset Mode Summary Table** starting on page 26 for details).

C Input and output LEDs — These green LEDs light steadily to indicate:

- **Signal** — An input or output signal is present. If video and sync are muted, the `Output` LED does not light.
- **HDCP** — The input or output signal has HDCP-encrypted content.

D Audio LEDs — These green LEDs light to indicate that an embedded audio signal is present in the output signal and whether it is two-channel (LPCM-2Ch) or multi-channel (Multi-Ch).

E RS-232 COM LEDs — These LEDs blink when data is being transmitted (Tx) and received (Rx).

F IR LED — This green LED lights when an IR signal is being transmitted.

G Digital I/O LEDs — Each of these green LEDs lights when a digital input or output device is connected to the corresponding port and the logic state of that port is low (see **Connecting to the Digital I/O Ports** on page 15 for more information.)

H CEC LED — This green LED lights while a CEC command is being sent to control the display.

I LAN LEDs — The `Link` and `Act` LEDs are also on the rear panel RJ-45 connector (see **figure 4**, **I** on page 11).

- **100** — This green LED lights when the unit has a 100Base-T connection.
- **Link** — This green LED lights to indicate a network connection.
- **Act** — This yellow LED blinks to indicate data is being sent or received.

Resetting the Unit

There are several reset modes available by pressing the **Reset** button. This button is recessed, so use an Extron Tweeker, a pointed stylus, or a ballpoint pen to access it.

ATTENTION:

- Review the reset modes carefully. Using the wrong reset mode may result in unintended loss of flash memory programming, port reassignment, or a unit reboot.
- Analysez minutieusement les différents modes de réinitialisation. Appliquer le mauvais mode de réinitialisation peut causer une perte inattendue de la programmation de la mémoire flash, une reconfiguration des ports ou une réinitialisation de l'unité.

NOTE: If the **Reset** button is held down continuously, the LED blinks every 3 seconds, and the unit enters a different mode, from the Use Factory Firmware Settings mode through the Enable or Disable DHCP mode. The modes are separate functions, not a continuation from one mode to the next.

See the **Reset Mode Summary Table** starting on page 26 for descriptions of the reset modes available for the WC 160 Pro.

Reset Mode Summary Table

Reset Mode Summary			
Mode	**Use This Mode to...**	**Activation**	**Result**
Use Factory Firmware Settings (Run Universal Boot Code)	Temporarily boot up the unit running only the universal boot code, then install the desired firmware. Use this in the event that a firmware update has failed or if incompatibility issues arise with user-loaded firmware	To start the Run Universal Boot Code reset mode and replace firmware: **1.** Press and hold in the recessed **`Reset`** button while applying power to the unit. Hold the button in until the `Reset` LED blinks twice, then release the button. The controller enters factory firmware mode, and the LED blinks rapidly. **2.** Upload new firmware to the unit as desired (see **Updating the Firmware** on page 57 for details). **NOTE:** Do not continue to operate the control processor using only the boot code. The unit requires a full firmware package in order to be fully operational. If you want to use the firmware version with which the unit shipped, you must upload that version again (see the *Global Configurator Help File* or *Toolbelt Help File* for instructions).	The control processor firmware is replaced. If the unit is powered on in Run Universal Boot Code mode, event scripts and systems do not start. All user files and settings such as drivers, adjustments, and IP settings are maintained. **NOTE:** To return the unit to the firmware version that was running prior to the reset, cycle power to the unit.
Reset to Factory Defaults	Start over with configuration and uploading	To reset the unit to all factory default settings: **1.** Hold down the **`Reset`** button for about 9 seconds until the `Reset` LED blinks once at 3 seconds, twice at 6 seconds, and three times at 9 seconds. **2.** Release and momentarily press and release the **`Reset`** button (for <1 second) within 1 second*. *Nothing happens if the momentary press does not occur within 1 second.	Reset to Factory Defaults mode performs a complete reset to factory defaults (except the firmware). • Does everything Reset All IP Settings mode does. • Removes all user-loaded files and configurations from the controller: • Clears driver-port associations (IR, serial, Ethernet) and port configurations. • Removes button configurations. • Removes schedules, settings, macros.

Reset Mode Summary			
Mode	**Use This Mode to...**	**Activation**	**Result**
Reset All IP Settings	Reset IP settings and port maps to factory defaults without affecting user-loaded files	To reset all IP settings: **1.** Hold down the **`Reset`** button for about 6 seconds until the `Reset` LED blinks once at 3 seconds, then twice at 6 seconds. **2.** Release and momentarily press and release the **`Reset`** button (for <1 second) within 1 second*. *Nothing happens if the momentary press does not occur within 1 second.	Resets All IP Settings mode: • Sets the IP address back to factory default (`192.168.254.250`) • Sets the subnet back to factory default (`255.255.255.0`) • Sets the default gateway address to the factory default (`0.0.0.0`) • Sets domain and host names to factory default. • Sets port mapping back to factory default. • Turns DHCP off. • Turns events off (user-created schedules, macros). • Stops any running program.
Start or Stop Program	Toggle stop or start program	To stop or start a program: **1.** Hold down the **`Reset`** button for about 3 seconds, until the `Reset` LED blinks once. **2.** Release and press the **`Reset`** button momentarily (for <1 second) within 1 second*. *Nothing happens if the momentary press does not occur within 1 second.	• The LED blinks 2 times if the program is starting. • The LED blinks 3 times if the program is stopping.

Reset Mode Summary			
Mode	**Use This Mode to...**	**Activation**	**Result**
Project Recovery	Recover project configuration and program files if passwords have been lost	To start the Project Recovery mode and recover a project: Press the front panel **Reset** button three times within 1 second. The Reset LED blinks for 30 seconds, while the device is in project recovery mode. After the Reset LED stops blinking and remains lit, the device returns to the previous state with no settings changed. Use this mode to recover project or program files if a product password is lost. **If using Global Configurator:** **1.** On the PC, open Global Configurator. **2.** From the Tools menu, select **Project Recovery**. The Recovery Mode dialog box opens. **3.** Enter the IP address or host name of the target device. **4.** Click **Recover**. The software allows indefinite time to establish a connection (until a connection is made or the user clicks **Cancel**). **5.** On the WC Pro 160, press the **Reset** button three times within 1 second. The control processor enters project recovery mode for 30 seconds, during which time the Reset LED blinks quickly. GC automatically connects to the control processor, then opens and retrieves the project from the unit. **6.** Perform the Reset to Factory Defaults on the unit. **7.** Open Toolbelt, start device discovery, select the control processor from the list, and click **Manage.** **8.** Click the **Network Settings** tab and set the IP address of the control processor. **9.** Click the **User Management** tab and change the password of the control processor. **10.** Close Toolbelt. **11.** In GC, add the new password to the recovered project. **12.** Save the project. **13.** Upload the project from GC to the control processor.	Project Recovery mode stops regular operation and allows a connection to be made to the unit via software without requiring password entry so that project files can be retrieved and saved. During project recovery mode, events are stopped, and so is communication with AV devices. While the control processor is in this mode, use the software to recover project files. Upon exiting project recovery mode: • The unit returns to its pre-recovery mode state and settings. • The Reset LED lights steadily.

Reset Mode Summary			
Mode	**Use This Mode to...**	**Activation**	**Result**
Enable or Disable DHCP	Enable or disable the DHCP client	To enable or disable the DHCP client for the LAN port: Press and release the **`Reset`** button five times consecutively. **Do not press** the button within 3 seconds following the fifth press.	• The `Reset` LED blinks six times if the DHCP client is enabled. • The `Reset` LED blinks three times if the DHCP client is disabled.
		NOTES: • By default, DHCP is off and the unit uses a static IP address. • When DHCP is disabled, the unit uses the factory default IP address, which is `192.168.254.250`, or the previously stored static IP address if it was not at default.	

NOTES:

- If using Global Configurator: After performing a Reset All IP Settings or Reset to Factory Defaults, use Toolbelt to set the IP address again for use on your network.
- The factory configured passwords for all accounts on this device have been set to the device serial number. In the event of a complete system reset, the passwords convert to the default, which is *`extron`*.

Remote Configuration and Control

This section describes remote operation of the WC Pro 160 controller. Topics include:

- **Using Simple Instruction Set (SIS) Commands**
- **Using the Command and Response Table**
- **Command and Response Table for SIS Commands**

The workspace automation controller can be controlled, monitored, or configured using the following:

- A user-defined string consisting of SIS commands.

  NOTE: SIS commands cannot be issued directly to the workspace automation controller, but are issued via an Extron control system on the AV network using a process known as “encapsulation”.

- Extron Toolbelt or a control system constructed using either Global Configurator Plus, Global Configurator Pro, or ControlScript Deployment Utility (see **Configuration Procedure for the Controller** on page 5)
- Built-in HTML web pages (see **Internal Web Pages** starting on page 41)

This section provides guidance on operation of the workspace automation controller via a string of commands, and lists the SIS commands.

Using Simple Instruction Set (SIS) Commands

The WC Pro 160 can be controlled via Extron SIS commands issued from a control system that is programmed with ControlScript.

Host-to-Workspace Automation Controller Communications

SIS commands consist of one or more characters per field. No special characters are required to begin or end a command character sequence. When a command is valid, the workspace automation controller executes the command and sends a response to the host device.

All responses from the workspace automation controller to the host end with a carriage return and a line feed (CR/LF = ↵), which signals the end of the response character string. A string is one or more characters.

Controller-initiated Messages

When a local event such as a change in signal status takes place, the controller responds by sending an unsolicited message to the host, indicating what change has occurred. No response is required from the host.

Unsolicited responses

`Hdcp 0` X2*X44↵	Response broadcast upon detection of a change in HDCP status X44 of output X2.
`In00•`X61↵	Response broadcast when a change in the input signal status X61 is detected (sync detected or removed).
`Amt` X10•X10↵	Response providing audio mute On or Off status X10 for digital and analog audio outputs. This message is broadcast when the volume is changed while audio mute is enabled.

Error Responses

If the controller is unable to execute a command it receives because the command is invalid or contains invalid parameters, the controller returns an error response to the host. The following error response codes can be sent:

- E01 – Invalid input channel (out of range)
- E10 – Invalid command
- E11 – Invalid preset number
- E12 – Invalid port number
- E13 – Invalid value (out of range)
- E14 – Not valid for this configuration
- E17 = Invalid command for signal type
- E22 = Busy
- E25 = Device not present
- E26 = Maximum number of connections exceeded
- E28 = Bad filename/File not found

Using the Command and Response Table

The **Command and Response Table for SIS Commands** starting on page 33, lists valid ASCII and hexadecimal command codes, the controller responses to the host, and a description of the command function or the results of executing the command.

The conversion table below is for use with the command and response table.

ASCII to Hex Conversion Table																	
Space →	2Ø	!	21	“	22	#	23	$	24	%	25	&	26	‘	27
(	28	)	29	*	2A	+	2B	,	2C	-	2D	.	2E	/	2F
Ø	3Ø	1	31	2	32	3	33	4	34	5	35	6	36	7	37
8	38	9	39	:	3A	;	3B	<	3C	=	3D	>	3E	?	3F
@	4Ø	A	41	B	42	C	43	D	44	E	45	F	46	G	47
H	48	I	49	J	4A	K	4B	L	4C	M	4D	N	4E	O	4F
P	5Ø	Q	51	R	52	S	53	T	54	U	55	V	56	W	57
X	58	Y	59	Z	5A	[	5B	\	5C	]	5D	^	5E	_	5F
`	6Ø	a	61	b	62	c	63	d	64	e	65	f	66	g	67
h	68	i	69	j	6A	k	6B	l	6C	m	6D	n	6E	o	6F
p	7Ø	q	71	r	72	s	73	t	74	u	75	v	76	w	77
x	78	y	79	z	7A	{	7B	|	7C	}	7D	~	7E	DEL	7F

Esc	1B	CR	ØD	LF	ØA

Figure 25. ASCII to Hex Conversion Table

Symbol Definitions

↵ = CR/LF (carriage return with line feed, hex 0D 0A)

← or | = Soft carriage return (no line feed, hex 0D)

• = Space

Esc or W = Escape

NOTE: Unless otherwise indicated, commands are not case-sensitive.

X1 = Input selection
1 = HDMI input

X2 = Output selection
1 = HDMI output

X10 = Audio mute status
0 = Audio mute off (default)
1 = Audio mute on

X42 = Output mute
0 = Off or disable (default)
1 = On or enable (mute to black)
2 = Mute output sync and video

X44 = HDCP status
0 = No sink or source device detected
1 = Sink or source detected with HDCP
2 = Sink or source detect but no HDCP is present

X50 = Output volume
000-100 in 1.0 steps. Default is 070.
Response is three digits, padded with zeros.

X51 = Audio output
1 = Local 5-pole captive screw analog audio output
2 = HDMI embedded TMDS audio output

X61 = Video signal status
0 = Video, TMDS signal not detected
1 = Video, TMDS signal detected

X66 = Input HDCP authorized
0 = Input HDCP Authorized disabled
1 = Input HDCP Authorized enabled (default)

Command and Response Table for SIS Commands

Command	ASCII Command (Host to Controller)	Response (Controller to Host)	Additional Description
Output Configuration			
Video Mute			
NOTE: Video is unmuted (default) after a power cycle.			
Mute output	1B	Vmt1↵	Mute the output video.
Unmute output	0B	Vmt0↵	Unmute the output video.
Mute sync and video	2B	Vmt2↵	Mute output video and sync.
View mute status	B	X42↵ *In verbose modes 2 and 3:* VmtX42↵	Show output video mute status X42.
KEY: X42 = Mute status		0 = Unmute video (default) 1 = Mute video (mute to black) 2 = Mute output sync and video	
Audio Configuration			
NOTE: If audio mute is on and the volume is changed, the audio unmutes immediately and the unit sends out an unsolicited audio unmute response (see **Unsolicited responses** on page 30).			
Volume			
Set volume	X50 V	Vol X50↵	Set output volume to X50.
Increment volume	+V	Vol X50↵	Increase output volume by 1.0 step.
Decrement volume	-V	Vol X50↵	Decrease output volume by 1.0 step.
View volume level	V	X50↵ *In verbose modes 2 and 3:* VolX50↵	View volume level X50.
KEY: X50 = Output volume		000-100 in 1.0 steps. Default = 70	
Audio Mute Control			
Enable global audio mute	1Z	Amt1↵	Mute all audio outputs.
Disable global audio mute	0Z	Amt0↵	Unmute all audio outputs.
Enable and disable discrete audio mute	X51*X10Z	AmtX51*X10↵	Set audio mute selection on output X51 to X10.
View audio mute status	Z	X10•X10↵ *In verbose modes 2 and 3:* AmtX10•X10↵	View mute statuses of audio output X51: **NOTE:** The first X10 is analog mute status, while the second X10 is HDMI status.
KEY: X10 = Enable or disable audio mute X51 = Audio output		0 = Off or disable, 1 = On or enable 1 = Local 5-pole captive screw analog audio output 2 = HDMI embedded TMDS audio output	

Command	ASCII Command (Host to Controller)	Response (Controller to Host)	Additional Description
Video Configuration and Status			
HDCP Output Status			
View output HDCP status	Esc0X2 HDCP←	X44↵ *In verbose modes 2 and 3:* Hdcp 0X2*X44↵	Show HDCP status X44 for output X2.

KEY:

X2	= Output selection	1 = HDMI output
X44	= HDCP status	0 = No sink or source device detected 1 = Sink or source detected with HDCP 2 = Sink or source detected but no HDCP is present

HDCP Authorized			
Set HDCP Authorized for the input	Esc EX1*X66 HDCP←	Hdcp EX1*X66↵	Set HDCP Authorized for input X1 to X66.
View HDCP Authorized status	EscEX1 HDCP←	X66↵ *In verbose modes 2 and 3:* HdcpEX1*X66↵	View the current HDCP Authorized setting X66 for the input.

KEY:

X1	= Input number	1 = HDMI input
X66	= Input HDCP Authorized	0 = Input HDCP Authorized disabled 1 = Input HDCP Authorized enabled (default)

Video Signal Presence			
View signal presence	Esc0LS←	X61↵ *In verbose modes 2 and 3:* In00•X61↵	Show video signal status X61 for the input.

KEY:

X61	= Signal presence	0 = Video/TMDS signal not detected 1 = Video/TMDS signal detected

Software-based Configuration and Control

This section of the guide is divided into the following topics:

- **Configuration and Control: An Overview**
- **Advanced Configuration Procedure for the Controller**
- **Downloading the Software and Getting Started**
- **Using Global Configuration: Helpful Tips**
- **Troubleshooting Connections and Configuration**

Configuration and Control: An Overview

The WC Pro 160 can be used out of the box, but it can also be reconfigured before use. It can be configured and controlled via a host computer attached to the same network as the controller (see **LAN/PoE port** starting on page 14 for details about the LAN port and cabling to connect the controller to the network).

- Configure the controller by using the Global Configurator software in GC Professional or GC Plus mode (see the Extron **website** for full system hardware and software requirements for GC).
- Using GlobalViewer, users can monitor the WC Pro.
- If not using GC Professional or GC Plus, use ControlScript programming software to program the control system as desired.
- The default web pages embedded within the controller provide a means to view general hardware information, network settings, and, if configured, project information.

NOTE: See **figure 12** on page 14 for the default login credentials for the WC Pro internal web pages.

Advanced Configuration Procedure for the Controller

The WC Pro 160 is shipped with a preloaded web-based configuration for CEC functionality and occupancy sensor. To create an advanced configuration, follow the steps outlined in figure 26, in the recommended order.

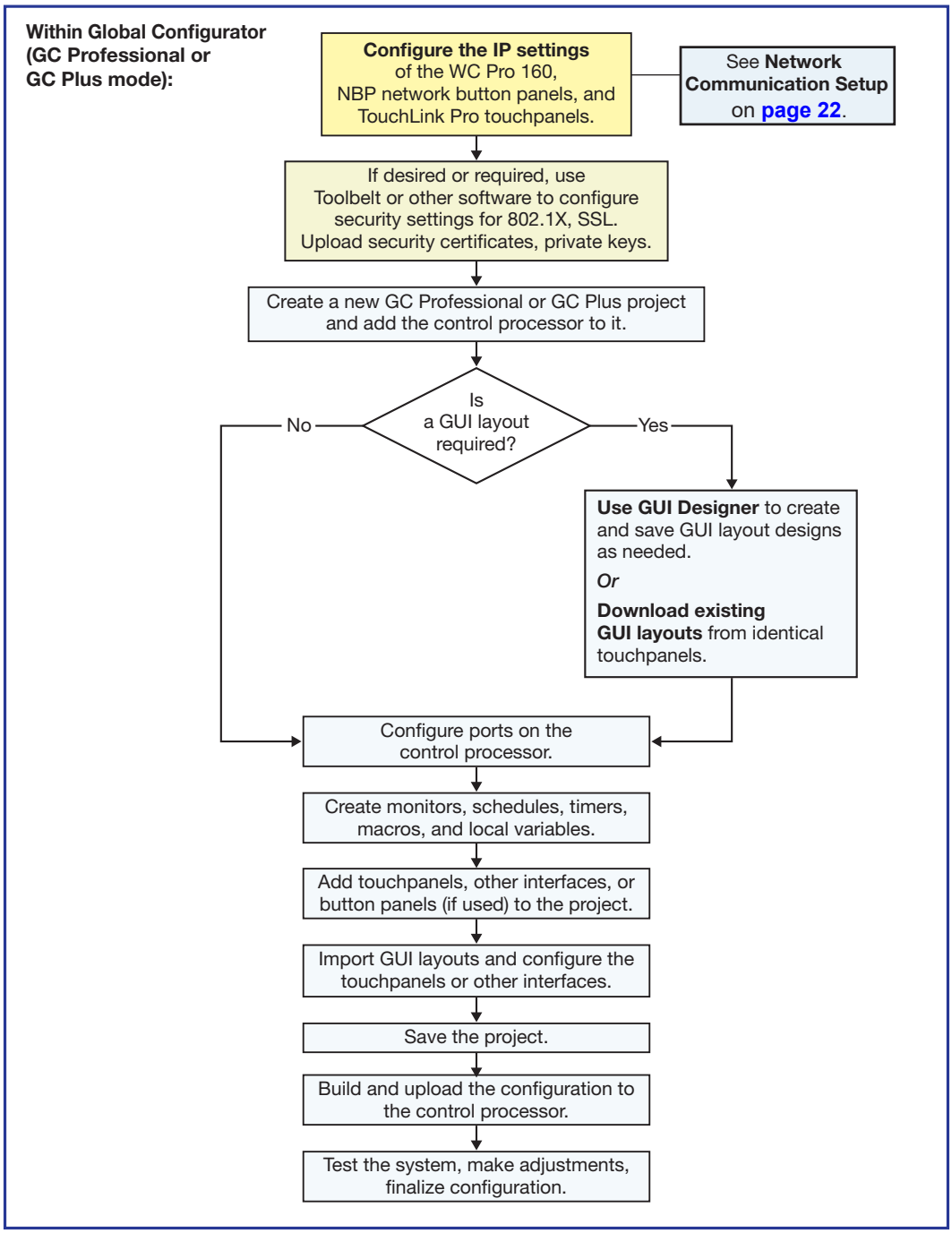

Figure 26. Advanced Configuration Steps

Downloading the Software and Getting Started

GC software, software updates, and a large variety of device drivers can be downloaded from the *DownLoad* page on the Extron website (**www.extron.com/download/index.aspx**). When the desired software or driver package is located, follow the on-screen directions to download and install it.

Locating Software, Firmware, and Driver Files on the Extron Website

There are three main ways to find software, firmware, and device drivers within **www.extron.com**:

- Using links from the web page for the specific product.
- Using the **Download** page (click on the **Download** tab at the top of any page within the Extron website).
- Using links from search results.

NOTE: For some software, there is an option to click the **Download** button to begin downloading the software file. For other software there is a link for contacting an Extron support representative who can provide access to the latest version.

To obtain Global Configurator (GC Professional, GC Plus) or ControlScript software, an Extron Insider account is required. Contact an Extron support representative for assistance. Extron provides training to our customers on how to use the software. For Global Configurator Professional, you must first attend Extron training, pass a proficiency test, and achieve Extron Control Professional Certification before being able to access all the features of that program.

Using links from the web page for the specific product

1. Navigate to the web page for the specific product model by performing one of the following:
   - Typing the model name into the **Search** field in the upper right of any Extron web page and clicking the **magnifying glass** icon
   - Selecting the model name from the **Product Shortcuts** drop-down list in the upper left of the Extron home page or *Products* page.
2. Click the **Downloads** tab in the middle of the product page. A list of available software, firmware, and documents for that model appears on screen.
3. Click on the name of the desired software or firmware to start downloading the file, or click on the link for device drivers to navigate to a page to select either a driver package or specific drivers for individual devices.

Using the Download Center page

1. Click on the **Download** tab at the top of any page within the Extron website to access the **Download** page.
2. Click the **Software** or **Control System Drivers** button in the center of the screen. A page opens that allows you to make more specific selections from within that category.
3. For **software**:

   Click the link for the specific software needed. A software product page opens that provides a description of the software package, a list of system requirements, a list of features, and access to the release notes, in addition to a download link.

   For **drivers**:

   Extron provides an extensive selection of device drivers available on the **Extron website**. Ethernet, serial, CEC, and infrared (IR) device drivers (for controlling projectors, displays, DVD players, document cameras, and so forth) are available as individual device driver files. Prior to configuration, download driver files for products to be used in the installation.

If the system requires a driver that is not already available, request a new serial (RS-232), IR, or Ethernet driver from Extron.

a. On the `Control System Drivers` search page, use the search fields and filters (see figure 27, ❶) to select the desired driver.

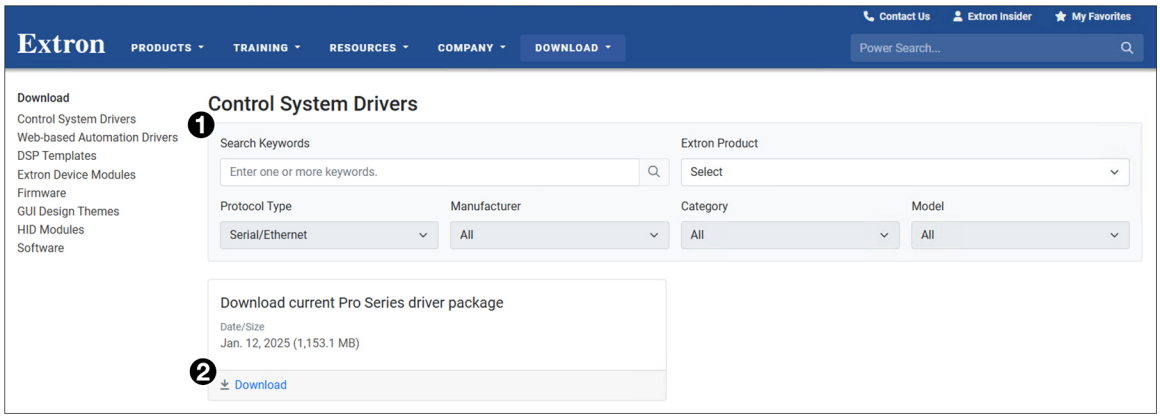

Figure 27. Control System Drivers Search Page

b. Click the **`Download`** link (❷) below the search fields to download the current *`Pro Series driver package`* of all available drivers supported by the control processor. Alternatively, search for, locate, and select the device or devices for which you need a driver file.

c. Select the name of the controller from the drop-down list.

d. To download a single driver rather than the package, click on the appropriate link in the row for the product desired to control to download the driver or to download the *`communication sheet`*. The communication sheet provides details that may be helpful for working with the product and its control driver.

4. For some software, click the **`Download`** or **`Download Now`** button to begin downloading the software file. For other software there is a link for contacting an Extron support representative who can provide access to the latest version. For **drivers**, navigate through the alphabetically arranged list to select and download a driver for a specific device.

Using links from search results

1. Type the specific name of the software package (such as **`Global Configurator`** or **`GUI Designer`**, or **`ControlScript`**) into the **`Search`** field in the upper right of the page and click the **`magnifying glass`** icon. A search results page opens.

2. Click on the name of the software package. A software product page opens that provides a description of the software package, a list of system requirements, a list of features, and access to the release notes, in addition to a download link.

3. For some software, click the **`Download`** or **`Download Now`** button to begin downloading the software file. For other software, there may be a link for contacting an Extron support representative who can provide access to the latest version.

Things to Do After Installing GC and Before Starting a Project

- Read the *Global Configurator Help File* for details and step-by-step procedures on how to start a GC project and perform basic setup tasks for a controller. The help file provides information on settings and how to use the software. See the *ControlScript Deployment Utility Help File* for instructions on programming with ControlScript.
- Obtain network addresses and related information from your network administrator.

- Set up the IP address for the controller (see **Installation Step 4: Set Up Network Communication** on page 22 for an overview of how to set up the network properties of the unit). For details, see the *Global Configurator Help File,* the *ControlScript Deployment Utility Help File*, or the *Toolbelt Help File*. The help files contain instructions on how to set the IP address, gateway IP address, subnet mask, mail server IP address, domain name, web port, SMTP username, and SMTP password so that the controller can communicate with the network.

Using Global Configurator: Helpful Tips

- The *WC Pro 160 Setup Guide* ships with the units. It includes a quick reference to the front and rear panel features, and covers basic hardware installation.
- See **Rear Panel Features** starting on page 9 for features and settings for the ports that need configuring.
- If the controller is configured at the installation site, Extron recommends downloading drivers for all the devices in the installation **before** you go out to the site.
- The Global Configurator project file (*.gcpro or *.gcplus) contains configuration settings and it can be saved to a directory or folder for backup or for installation on another WC Pro 160 controller. Saving a configuration is recommended before performing a firmware upgrade.
- IP address, subnet mask, and gateway address are required during network setup of the controller.
- The unit name is any desired name to label a specific WC Pro unit (for example, `Room250-WCPro` or `LectureHallCtrlWC`). The default name is a combination of the product name and last six digits of the hardware (MAC) address. This can be changed to your choice of alphanumeric characters and hyphens (-).
  - Spaces are not permitted within the name of a unit or at the start or the end of a name.
  - Underscores (_) are not permitted.
  - Valid characters are `A-Z`, `a-z`, `0-9`, and `-` (hyphen).
  - The unit does not distinguish between upper- and lowercase letters.
  - The name cannot start with a number or a hyphen, and it cannot end with a hyphen.
  - Maximum name length is 63 characters.

Troubleshooting Connections and Configuration

Turn on the input devices (DVD players, VCRs, PCs, and other sources), output devices (display screens, projectors), the controller, and the PC. If an input or output AV device cannot be remotely controlled (does not respond as expected), check the following:

Power Connections

- Ensure all devices are plugged in.
- Make sure each device is receiving power. The WC Pro front panel lights if the controller is receiving power.

Data Connections

1. Check the cabling connections (**Installation Step 3: Cable Devices** starting on page 9) and make adjustments as needed. The Link LEDs on the WC Pro and on the PC should be lit solid green if a network connection is detected. If these LEDs are not lit, either the cable is faulty or not plugged in, or the wrong type of cable is being used (see **Installation Step 4: Set Up Network Communication** on page 22).

2. Try to “ping” the unit by entering **`ping 192.168.254.250`** at the command prompt on a PC, or use the IP or web address provided to you by your system administrator.

   If no response:

   - Make sure the unit is using the appropriate subnet mask (check with your system administrator).
   - Make sure your PC and network do not have a software firewall program that might block the IP address of the WC Pro unit.

3. If contact is established with the unit, but the WC Pro web pages cannot be accessed by your browser program, verify (via an Internet network options or preferences menu) that your browser is configured for direct network connection and is not set up to use a proxy server.

Device Control Connections and Configuration

- Verify ports are wired correctly on the WC Pro and, if applicable, on the controlled device.
- Ensure each IR emitter head is placed adjacent to or directly over the IR pickup window on the controlled device.
- Verify the appropriate drivers were used while creating the GC configuration file and that the correct commands and signal types (IR, RS-232, Ethernet) are associated with the appropriate ports on the WC Pro and on the other devices.
- For digital input connections, verify whether the application requires the +5 VDC pull-up resistor within the WC Pro for TTL circuits and use the software to check whether it is selected within the configuration.
- Verify input voltage at the digital input port does not exceed 24 VDC.

If still experiencing problems, call the Extron S3 Sales & Technical Support Hotline (1.800.633.9877).

Internal Web Pages

Accessing the Internal Web Pages

Access the WC Pro receiver internal web pages as follows:

1. Connect the WC Pro device to a LAN using the rear panel RJ-45 LAN port (see **figure 4** on page 9).
2. Open a web browser on a PC connected on the same LAN.

   NOTE: Compatible web browsers are Microsoft® Edge®, Mozilla® Firefox®, Google Chrome™, and Apple® Safari®.

3. Enter the WC Pro IP address or hostname in the browser **`Address`** field.

   NOTE: If the local system administrators have not changed the value, the factory-specified default is `192.168.254.250` for the rear panel LAN port.

4. Press the **`<Enter>`** key on the keyboard. The sign-in web page opens.

   NOTES:
   - If this is the first time accessing the `Internal Web Pages`, the `Universal Access Key` (UAK) panel opens on top of the web page.
   - If the LinkLicense for WC Pro Control Processor was purchased and uploaded in Toolbelt prior to opening the Internal Web page, the device opens directly to the login page. A UAK is not needed.

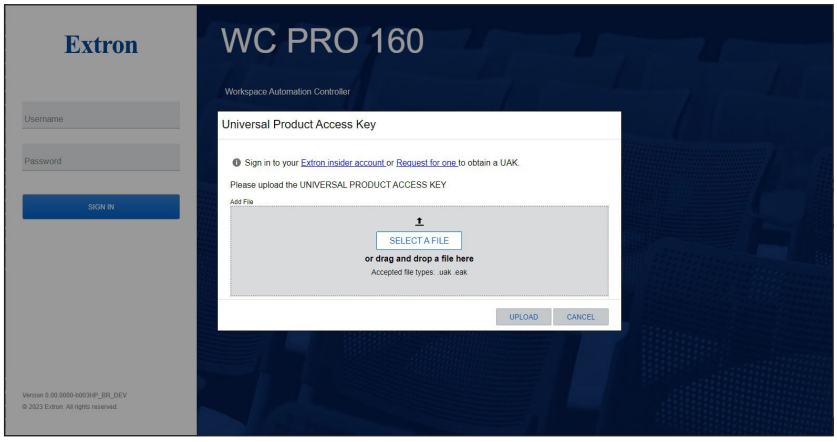

Figure 28. Universal Access Key Prompt

To access the WC Pro with the UAK:

a. Select **`Extron insider account`** to sign in. If you do not have an Extron insider account, select **`Request for one`**. These links open a page on the Extron website.

b. Once signed in to the Extron insider account, go to **https://www.extron.com/myaccount/uak** or **https://proof.extron.com/myaccount/uak**.

c. Click the **`Retrieve a New Universal Access Key`** button to request a UAK. The access code file is downloaded to the `Downloads` folder on the computer.

d. On the `Universal Access Key` panel, either click **`SELECT A FILE`** to upload, or drag and drop the access key file from the Downloads folder to the `Add File` pane.

5. The WC Pro is password protected. Enter **admin** or **user** in the **Username** field and the password in the **Password** field when prompted (see figure 28).

> **NOTE:** The factory configured passwords for all accounts on this device have been set to the device serial number. In the event of a complete system reset, the passwords convert to the default, which is `extron`.

6. Click the **SIGN IN** button.

Web Pages

The WC Pro 160 internal web page opens to the `Device Utilities` page (see **figure 29**) that provides a read-only overview of the WC Pro 160, with editable drop-down panels. This page allows the user to access `Display Control` and `EDID` configuration pages, while also allowing buttons to back up, restore, reboot, and reset the unit.

The drop-down panels and `Device Utilities` tabs are accessed by clicking on the name of the panel or the arrow next to the name.

> **NOTE:** If the LinkLicense for WC Pro Control Processor was purchased and a GCP file was configured and uploaded to the device, the pages are view only, and the left **DEVICE UTILITIES** and **CONFIGURATION** panel is not available. All configuration is done using GCP. To return the device to web based configuration, reset the unit.

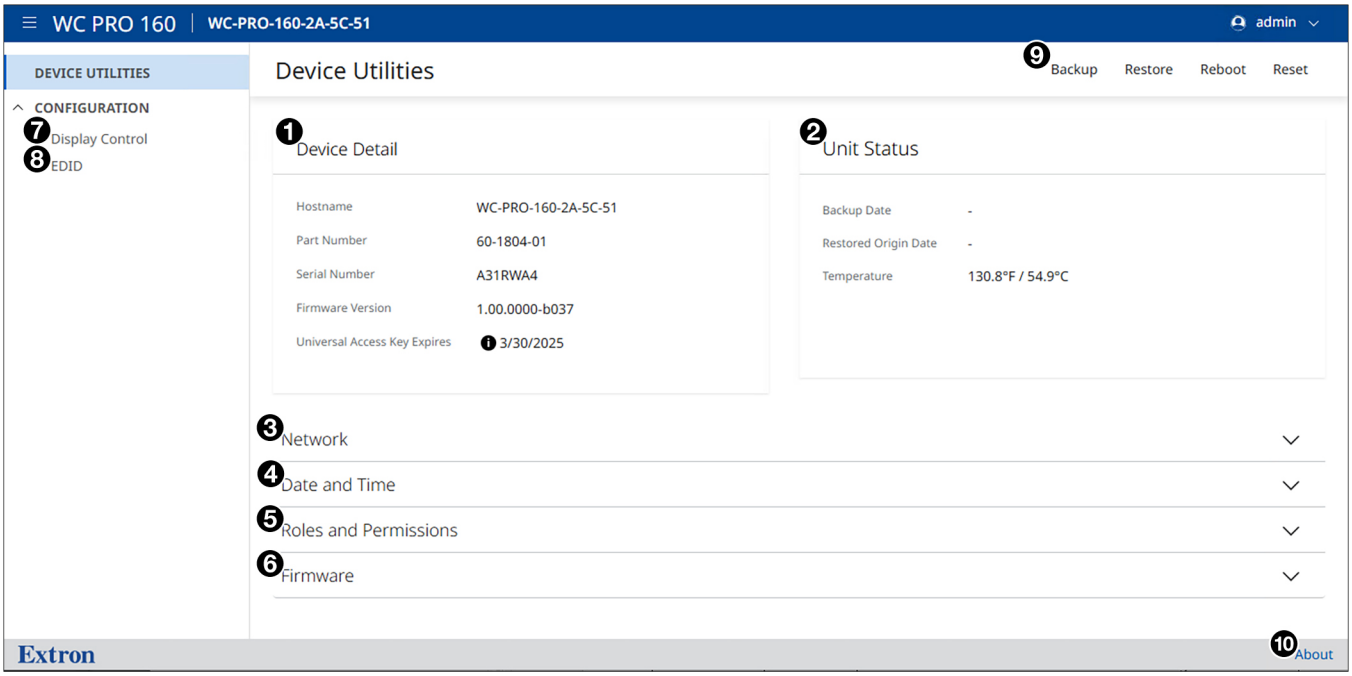

1. **Device Detail panel**
2. **Unit Status panel**
3. **Network panel**
4. **Date and Time panel**
5. **Roles and Permissions panel**
6. **Firmware panel**
7. **Display Control Page**
8. **EDID Page**
9. **Backup, Restore, Reboot, and Reset Links**

Figure 29. WC Pro 160 Internal Web Page

To view general information about the WC Pro 160, click the **ABOUT** link (10) .

Device Utilities Page

The Device Utilities Page contains the following panels:

Device Detail panel

The `Device Detail` panel (see **figure 29**, ❶ on page 42) displays the device name (`Hostname`), part number, and serial number. It also displays the firmware version and the UAK expiration date if the unit does not have a LinkLicense

Unit Status panel

The `Unit Status` panel (❷) displays the date of the last backup, date of the restored origin, and the internal temperature.

Network panel

In the `Network` panel (❸), the user can:

- Change the device name (hostname) and edit the IP address, subnet mask, gateway address, and DNS servers.
- Search the domain name and MAC address for the WC Pro 160
- Enable or disable DHCP.

To change the hostname:

1. Click **`EDIT`** in the `Network` panel. The editable fields are displayed (see figure 30 at right).
2. In the **`Device Name / Hostname`** field, edit the name as desired.
3. When finished editing, click **`SAVE`** to confirm your changes or **`CANCEL`** to close the window without making changes.

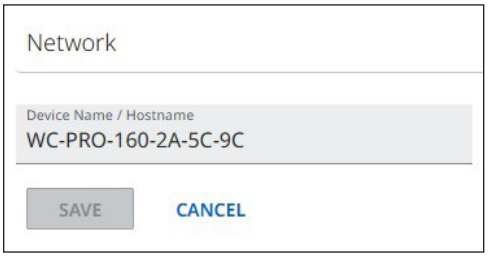

Figure 30. Network Panel Hostname

To set the IP addresses:

1. Click **EDIT** in the Network panel. The editable fields are displayed (see figure 31 at right).
2. Edit the network settings as desired:
   a. Click the **DHCP** switch to toggle DHCP on and off. When DHCP is enabled (On), the unit configures its IP address and other network settings from the DHCP server. The default is Off.
   b. To set any of the addresses: **IP Address**, **Subnet Mask**, and **Default Gateway** address, click in the desired field and enter the address.
3. When finished editing, click out of the field and click **SAVE** to confirm your changes or **CANCEL** to close the window without making changes.

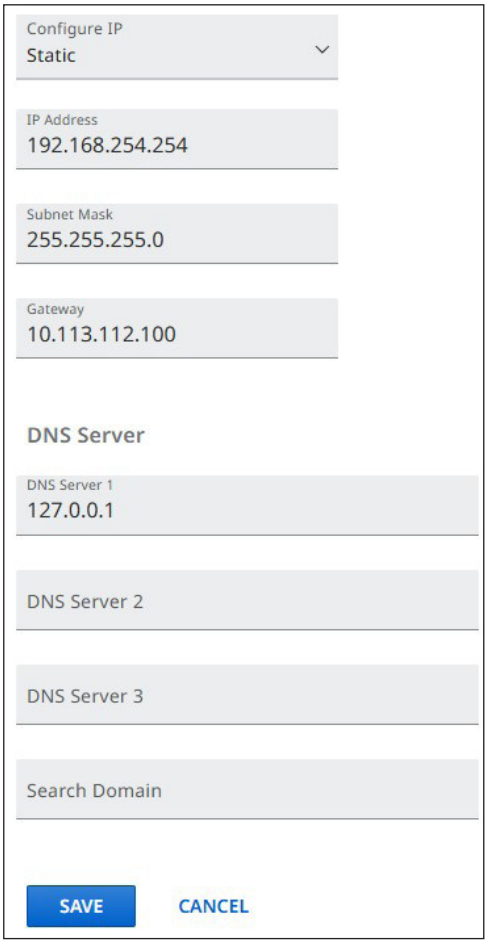

Figure 31. Network Panel

Date and Time panel

The `Date and Time` panel (see **figure 29**, ❹ on page 42) displays the mode used to set the date and time, the current date, and current time. There are three options to set the date and time: manual mode, sync to NTP (Network Time Protocol) servers, and sync to the connected PC.

To set the date and time in manual mode:

1. Click **`EDIT`** in the `Date and Time` panel. The editable fields are displayed (see figure 32).
2. Select the **`Manual`** radio button.
3. Edit the **`Date/Time`** as desired by typing in the date and time or using the calendar and clock.
4. Edit the **`Time Zone`** as desired using the drop-down list.
5. When finished editing, click **`SAVE`** to confirm your changes or **`CANCEL`** to close the window without making changes.

Alternatively, click **`SYNC TO PC`** to set the date and time according to the computer.

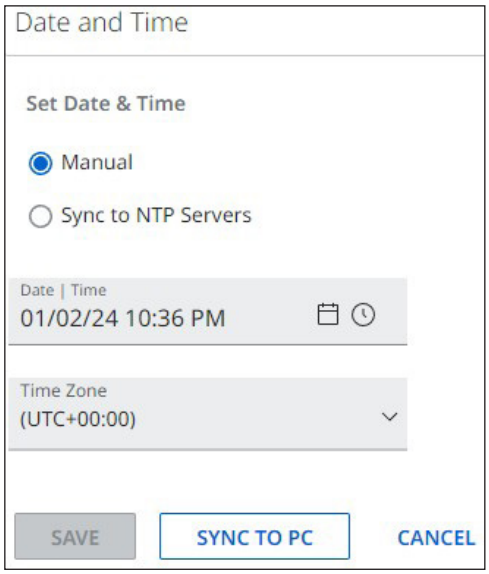

Figure 32. Manual Mode

To set the date and time in sync to NTP servers mode:

> **NOTE:** There are three NTP address fields to ensure that if any of the NTP servers are down or not available the device re-attempts with the next NTP server in priority order.

1. Click **`EDIT`** in the `Date and Time` panel. The editable fields are displayed (see figure 33).
2. Select the **`Sync to NTP Servers`** radio button.
3. Click in an **`NTP Server`** field and enter the IP address or host name of a desired NTP Server.
4. When finished editing, click **`SAVE`** to confirm your changes or **`CANCEL`** to close the window without making changes.

Alternatively, select the **`Manual`** radio button in step 2, and click **`SYNC TO PC`** to set the date and time according to your PC.

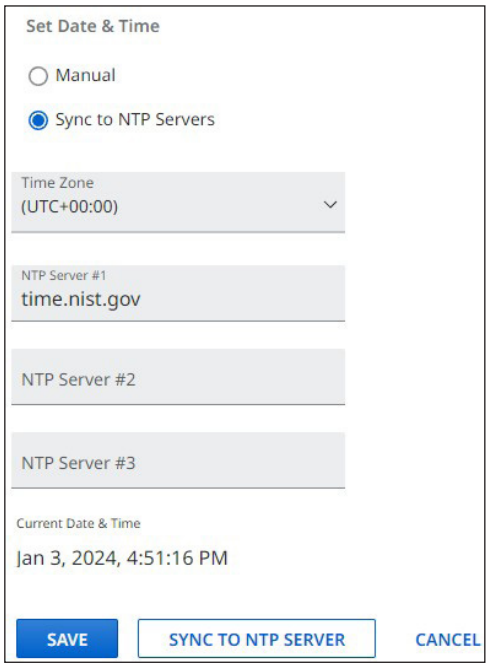

Figure 33. Sync to NTP Servers Mode

Roles and Permissions panel

The `Roles and Permissions` panel (see **figure 29**, ❺ on page 42) displays whether `Admin` and `User` passwords have been set and provides an option to set administrator or user passwords. It does not display the actual password.

NOTE: The following rules apply to passwords:

- Length is 1-128 characters.
- All human-readable characters are permitted except |.
- The password cannot be a single space.
- Passwords are case-sensitive.
- If the device is reset, the `Admin` or `User` password defaults to **`extron`**.
- The factory configured passwords for all accounts on this device have been set to the device serial number. In the event of a complete system reset, the passwords convert to the default, which is **`extron`** for the `Admin` and `User`.

To assign an administrator and user passwords:

1. Click **`EDIT`** in the `Roles and Permission` panel. The editable fields are displayed (see figure 34).

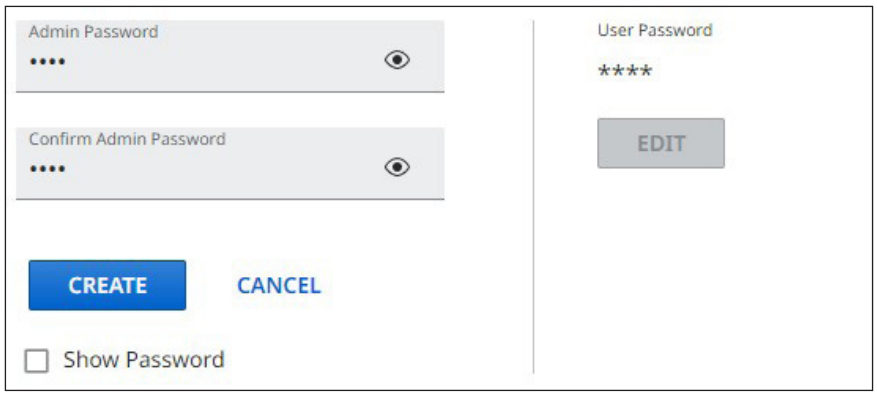

Figure 34. Roles and Permissions Panel

2. Click in the **`Admin Password`** field and enter the new administrator password.
3. Click in the **`Confirm Admin Password`** field and enter the password from the `Admin Password` field.
4. To assign a **`User Password`**, repeat steps 2 and 3 in the `User Password` panel.
5. When finished, click **`SAVE`** to set the passwords. To close the window without saving a password, click **`CANCEL`**.

NOTE: Passwords can be changed but they cannot be removed entirely. The WC Pro 160 must have passwords at all times. These fields cannot be blank.

Firmware panel

The `Firmware` panel (see **figure 29**, ❻ on page 42) displays the current firmware version and the date it was last updated. Update the firmware on the WC Pro 160 from this panel (see **Locating and Downloading the Firmware** starting on page 57 to download the firmware files).

To update firmware:

1. In the Firmware panel, click the **`SELECT FILE`** button.
2. In the `Open` dialog box, browse to locate the new firmware file on your computer (by default the file is usually stored at `C:\Program Files (x86)\Extron\Firmware\WC Pro 160` after being downloaded from the Extron website).

   NOTE: Firmware file for WC Pro 160 has an `.eff` extension. Do not attempt to load any other file types.

3. Double-click the firmware file name. The `Open` window closes, and the selected firmware file name appears in the `Update Firmware` panel on the web page.
4. Click **`INSTALL`** to begin. During the updating process, a window appears in the middle of the screen, showing messages giving the progress of the update: `Uploading`, `Installing the Firmware`, and `Rebooting Device`.

When the update is completed, the message window closes and the message `Firmware Upload Complete` appears near the top of the screen. The user is logged out, then prompted to log in again.

The new firmware filename appears under `Current Version` in the `Firmware` panel.

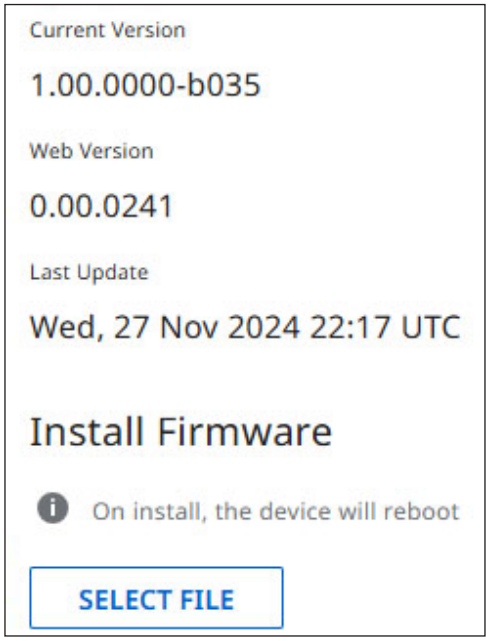

Figure 35. Firmware Panel

Display Control Page

NOTE: If the LinkLicense for WC Pro Control Processor was purchased and a GCP file was configured and uploaded to the device, the pages are view only, and the left **`DEVICE UTILITIES`** and **`CONFIGURATION`** panel is not available. All configuration is done using GCP. To return the device to web based configuration, reset the unit.

The `Display Control` page has three tabs to connect a display, turn power on and off via the HDMI signal presence or a connected occupancy sensor, and create schedules to turn the display on and off. When the **`Display Control`** tab (❼) is selected, the page opens to the `Connection` panel (see **figure 36** on the next page).

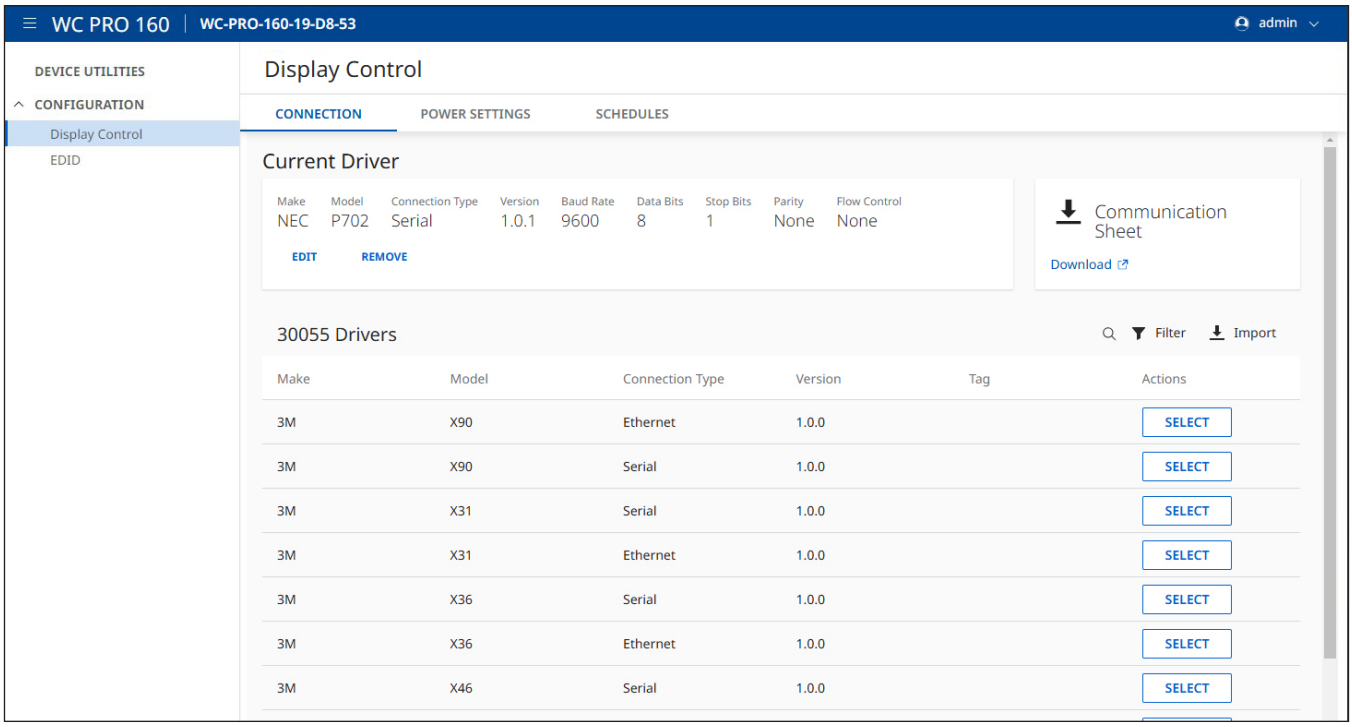

Figure 36. Display Control Page

Connection page

The `Connection` page displays the **`Current`** `Driver` enabled and the drivers that have been pre-loaded to the device and provides fields to search, filter, import, and configure the drivers.

NOTE: The web-based automation drivers (.PKJ) are different from the GC control system drivers (.PKP).

Current Driver panel

The driver that is currently enabled is displayed at the top of the page.

To change the parameters for the current driver:

1. Click the **`EDIT`** link, and the `EDIT` pane opens on the right side.
2. Enter the parameters in the available fields.
3. Click **`CONFIRM`** to complete the process or **`CANCEL`** to close the dialog without changing the parameters.

To remove a driver, click the **`REMOVE`** link.

Communication Sheet panel

The `Communication Sheet` panel contains a **`Download`** link that downloads and opens the `IPL Pro Device Interface Communication Sheet`. This document provides assistance with wiring the WC Pro 160 to the display device.

Importing and navigating drivers

NOTE: Individual drivers can be downloaded from the Extron website **Drivers page**.

Icons and links to search, filter, and import drivers are in the right corner of the page above the list of drivers.

To search for a driver, click the **Search** magnifying glass icon and enter the name, model, or type of the desired driver.

To sort the columns, click on the desired column name and select the up or down arrow to list them alphabetically.

To narrow the list of drivers to a selection:

1. Click the **Filter** link and the Filter By pane opens on the right.
2. Select the desired variables from **Make**, **Model**, **Connection Type**, and **Driver Tag**.
3. Click **VIEW RESULTS** to see the filtered list or **CANCEL** to close the pane without implementing the filter.

To import a driver:

NOTE: Go to the **Extron Web-Base Automation Drivers** page to download individual drivers and import them into the device. These are not the same as the GCP drivers.

1. Click the **Import** link. The Import A New Driver dialog box opens.
2. Click **SELECT A DRIVER** or drag and drop a driver from a folder containing downloaded drivers on the connected PC.
3. Click **IMPORT** to complete the process or **CANCEL** to close the dialog without importing the driver.

   A confirmation message banner posts at the top of the driver page and an Imported tag posts in line with the newly imported driver.

Selecting a driver

Selecting drivers allows the user to select any driver that is imported to the controller, and map the configuration.

To select a driver:

1. Click **SELECT** in the row of the desired driver. The Drivers Settings dialog opens.
2. Fill in fields for the connection parameters of the device. The parameters vary depending on the type of driver.
3. Click **CONFIRM** to complete the process or **CANCEL** to close the dialog without adding the driver.
4. A confirmation message banner posts at the top of the driver page with a message that the driver was successfully updated.

Editing a driver

Once a driver has been selected, it is displayed at the top of the page in the Current Driver pane. This driver can be edited or removed. The user can also download the driver **Communication Sheet**.

Note: IR drivers do not have comm sheets.

To edit a driver:

1. Click **EDIT** in the Current Driver pane. An Edit Current Driver pane opens on the right side. The driver connection parameters can be edited in this pane.
2. Edit the driver parameters by filling in the populated fields. The parameters vary depending on the type of driver.
3. Click **SAVE** to complete the process with the updated information or **CANCEL** to close the dialog without editing the driver.

To remove a driver:

1. Click **REMOVE** in the `Current Driver` pane. A `Remove Driver?` dialog opens.
2. Click **REMOVE** to remove the driver. The dialog closes and the list of drivers is available to select a driver if desired.

   Alternatively, click **CANCEL** to close the dialog without removing the driver.

Deleting a driver

Deleting drivers allows the user to delete any driver that has been imported to the controller.

> **Note:** Only drivers that have been imported to the controller can be deleted. Extron loaded drivers cannot be deleted.

To delete a driver:

1. Click **DELETE** in the row of the desired driver. The `Delete Driver?` dialog opens.
2. Click **DELETE** to complete the process or **CANCEL** to close the dialog without deleting the driver.
3. A confirmation message banner posts at the top of the driver panel with a message that the driver was successfully deleted.

Power Settings tab

Configure the WC Pro 160 to use the HDMI signal presence or a connected occupancy sensor to trigger the display to turn on and off. They can be used individually or together.

> **Note:** An OCS 100 occupancy sensor must be connected to the Digital Input 1 to use the Occupancy Sensor toggle switch.

To configure power on and off:

1. Toggle each switch, as desired, to turn the display on.
2. Toggle each switch, as desired, to turn the display off.
3. Set a time delay to ensure the display stays powered on while users switch the input HDMI cable between sources (for example, two laptops).

   Edit the field by typing a number between 1-60 seconds, or clicking the **+** and **-** buttons. Enter **0** seconds to send a `Power Off` command immediately after the HDMI input source is removed.
4. Test the `Power On` and `Power Off` function by clicking the **TEST** button. This sends the `Power On` or `Power Off` command out of the control port via the assigned display driver.

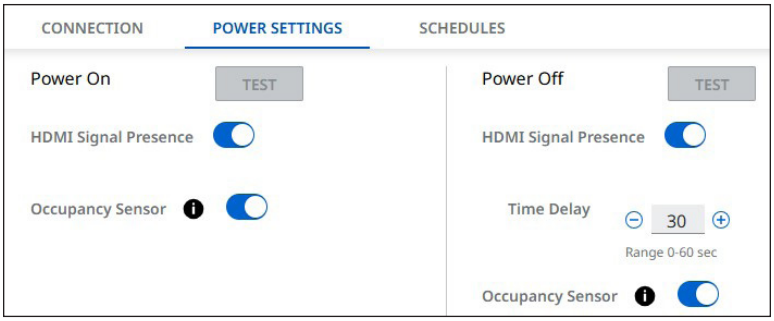

Figure 37. Power Setting Panel

Schedules tab

Create schedules to turn the display on and off at selected times and days.

To add a schedule:

1. Click **ADD SCHEDULE** from the Schedules panel and the ADD SCHEDULE pane opens on the right side (see figure 38).
2. Enter a name for the desired schedule in the **Schedule Name** field.
3. Select the **ON** or **OFF** radio button in the **Display Control** field for the action desired for this schedule.
4. Enter the desired time for this schedule to occur in the **Time** field.
5. Select the checkbox for the day or days for this action to take place in the **Select days to apply schedule** field.
6. (Optional) Add a description of the schedule.
7. When finished, click **SAVE** to set the schedule. To close the window without saving the schedule, click **CANCEL**.

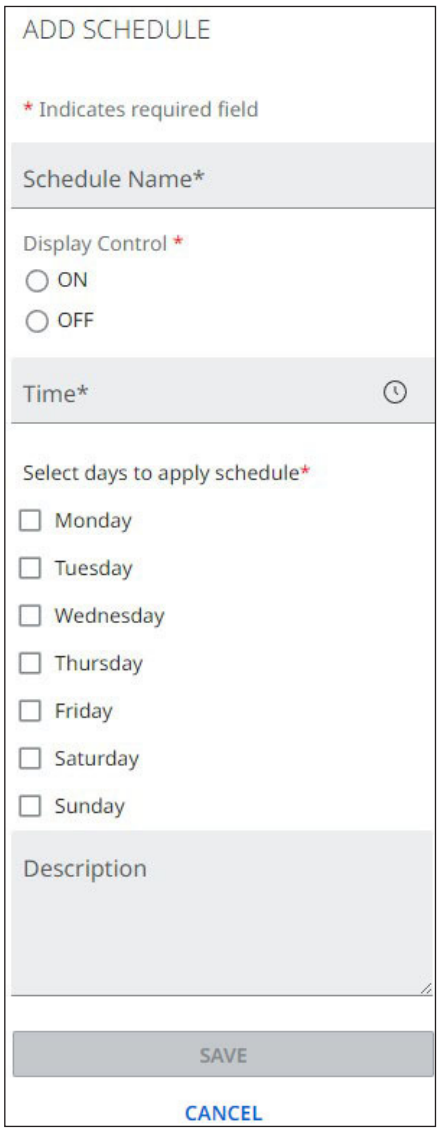

Figure 38. Schedules Panel

EDID Page

NOTE: If the LinkLicense for WC Pro Control Processor was purchased and a GCP file was configured and uploaded to the device, the pages are view only, and the left **DEVICE UTILITIES** and **CONFIGURATION** panel is not available. All configuration is done using GCP. To return the device to web based configuration, reset the unit.

The EDID page (see **figure 39** on the next page) allows the user to assign EDID to the HDMI input. The preferred source resolution can be changed between the resolutions shown on the page. The currently assigned EDID properties can also be viewed.

This EDID page supports changing the preferred source resolution between the four EDIDs shown on the page. These are all HDMI video type. Additional EDID files can be uploaded to the WC Pro 160 using PCS.

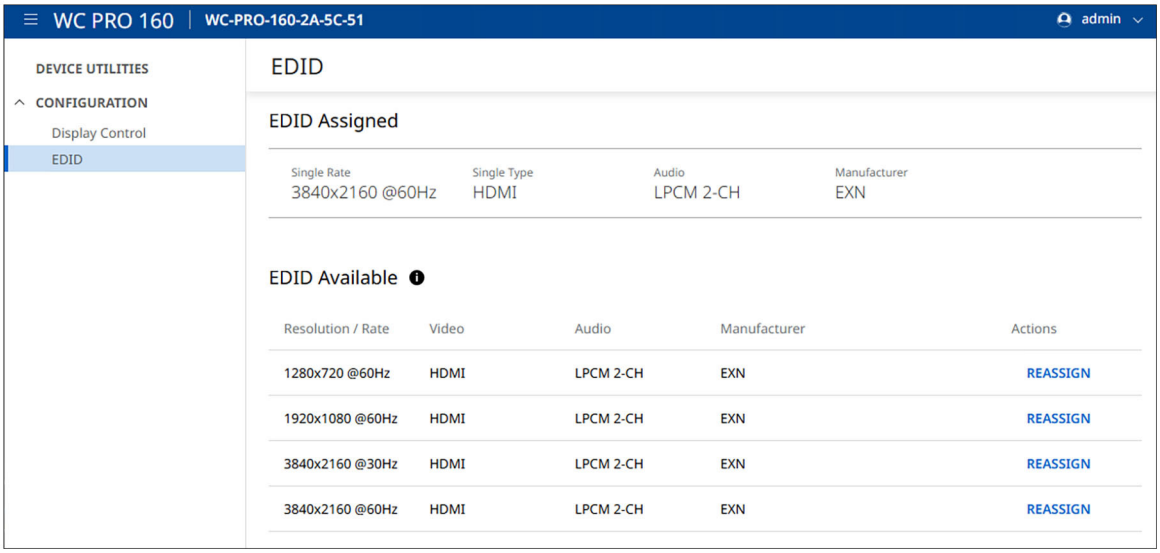

Figure 39. EDID Page

To assign a different EDID to the input:

Click the **`REASSIGN`** button to the right of the desired EDID in the `EDID Available` panel.

Information on the selected EDID appears in the EDID Assigned panel, and the message `Success! EDID was successfully reassigned` pops up briefly.

Backup, Restore, Reboot, and Reset Links

These utility links (see **figure 29**, ❾ on page 43) allow the user to create a backup file of the configuration, restore a backup configuration to the device, reboot, or reset the device.

- **Backup** — When this link is clicked, the device creates a backup file and a confirmation dialog opens in front of the page. The device file is saved as a `.cfg` file.
- **Restore** — When this link is clicked, a `Restore` dialog opens in front of the page to browse to the backup file to select. After the file is selected, click **`RESTORE`** to continue or **`CANCEL`** to quit the restore.

> **Note:** The following are backed up or restored on the device:
> - Everything in the `Display Control` section.
> - EDID settings.
> - Date and time settings in the `Device Utilities` section.

- **Reboot** — When this link is clicked, a `Reboot Device?` dialog opens in front of the page to confirm the reboot. Click **`REBOOT`** to continue or **`CANCEL`** to quit the reboot. A reboot restarts the device.
- **Reset** — When this link is clicked, a `System Reset` dialog opens in front of the page to confirm the reset. Click **`RESET`** to continue or **`CANCEL`** to quit the reset. Resets the web configuration to the default configuration, which includes replacing the CEC driver and re-enabling power settings, erasing the GCP configuration, and resetting EDID to the default `1080p @ 60 Hz`.

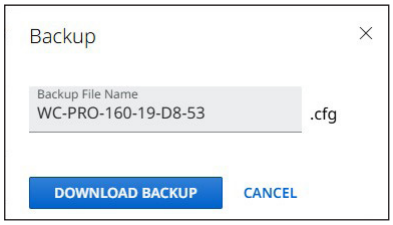

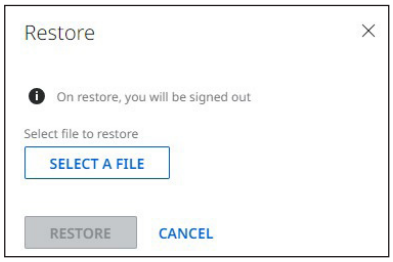

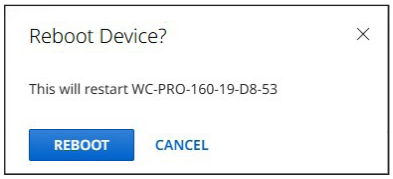

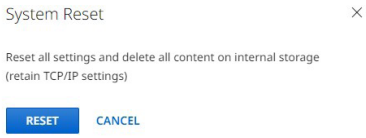

About the WC Pro 160

Click on the **`About`** link (see **figure 29**, ❿ on page 39) to open the `About` dialog box (see figure 40) to view general information about the WC Pro 160, such as the firmware version, copyright, part number, licenses, patents and web page version. Click on the **`View the End User License Agreement`** link to view the user license.

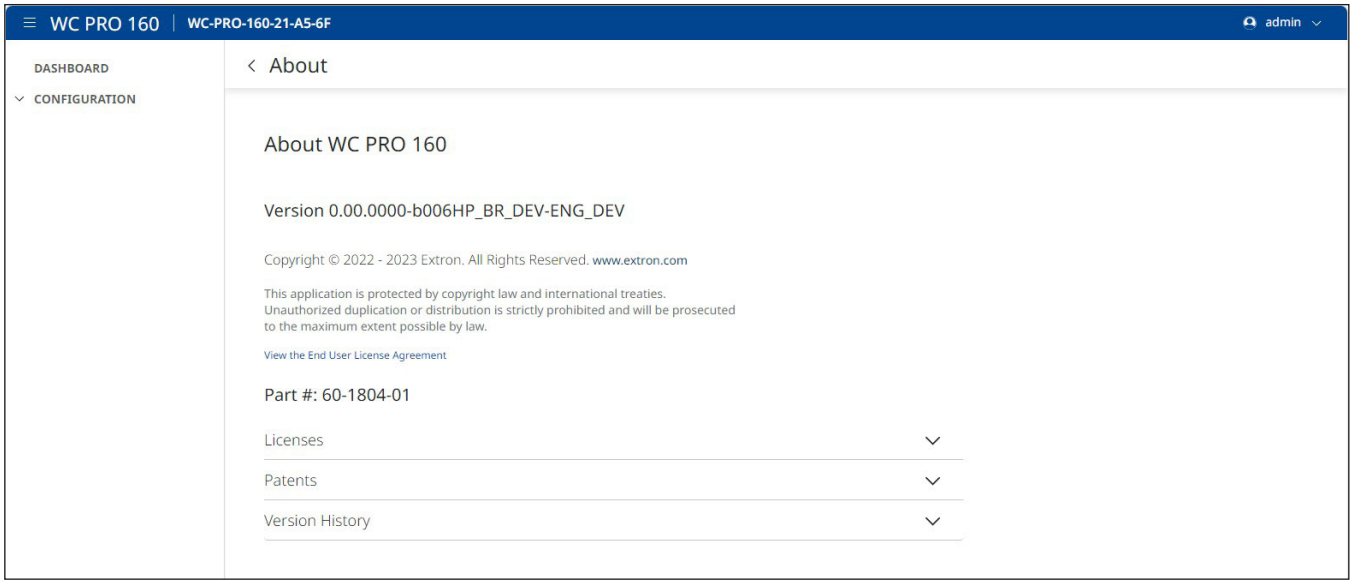

Figure 40. About the WC Pro 160 Dialog Box

Reference Information

This section of the guide includes the following reference items:

- **UL Guidelines**
- **Best Practices for Cleaning Your Extron Products**
- **Network Port Requirements and Licensed Third-Party Software**
- **File Types: A Key to Extron-Specific File Names**
- **SNMP**
- **Firmware Updates**

Full product specifications are available via the WC Pro 160 product pages at **www.extron.com**.

UL Guidelines

The following Underwriters Laboratories (UL) guidelines pertain to the WC Pro 160:

CAUTION:

- Manufacturer recommended operating temperature — 0-50C
- Purpose of Control — Operating Control, Occupancy Sensor
- Pollution Degree — 2
- Impulse Voltage — 500 V

Les consignes UL (« Underwriters Laboratories ») suivantes concernent le WC Pro 160 :

ATTENTION :

- Température de fonctionnement recommandée par le fabricant — 0-50° C
- Objectifs de contrôle — Contrôle opérationnel, détecteur de présence
- Degré de pollution — Niveau 2
- Impulsion de tension — 500 V

Best Practices for Cleaning Your Extron Products

There may be times when it becomes necessary to clean your Extron product. Plastic surfaces and cosmetic finishes can be damaged by long term exposure to chemicals. Therefore, Extron recommends the following guidelines when cleaning our products.

All Extron products can be safely cleaned with:

1. 70% concentration or higher Isopropyl Alcohol
2. Disinfectant cleaners that:
   - Are non-ammonium based (for example, contains no ammonium chloride)
   - Contain 2% or less sodium hypochlorite (for example, 2% bleach, 98% water)

It is important to follow these general guidelines when cleaning:

1. If possible, unplug the device.
2. Spray the cleaner on a lint-free cloth until the cloth is damp.
3. Do not spray the cleaner directly onto the product.
4. Gently clean the product surface using the cloth.

Your health and safety are our top priority. Keeping devices clean, especially those in high-traffic environments and high-use applications, is a crucial step in minimizing the spread of infections. Please contact us if you have any questions about the guidelines or if you have a question about cleaning the product.

Network Port Requirements and Licensed Third-party Software

Network administrators may find it useful to know which ports, protocols, and services are used by the IP Link Pro control processors (including the WC Pro 160), TouchLink Pro Touchpanels, Global Configurator Plus and Professional software, ControlScript, Toolbelt, and Extron Control (for IP Link Pro control systems). A list of protocols used for inbound and outbound communication for each type of device or software is available in the *Pro Series Control Product Network Ports and Licenses Guide*, available at **www.extron.com**.

The control processors use various licensed third-party software packages during operation. To view details about third-party packages and associated licensing:

1. On any of the `Internal Web Pages`, click the **`About`** link in the lower-right corner (see **figure 29**, ❿ on page 37).
2. Click the **`Licenses`** drop-down link. A `License` *`Information`* window opens. Click the “Licenses” drop down in the about section of the embedded web pages of the control processor.
3. To view a copy of a listed license package, filter through the licenses alphabetically and select the target license This opens a copy of the package license in a separate window. A list of licenses is also available in the *Pro Series Control Product Network Ports and Licenses Guide* at **www.extron.com**.

File Types: A Key to Extron-Specific File Names

The controller uses files with the following extensions:

- **.eff** — This is an Extron firmware update file (see **Firmware Updates** starting on page 56 for details on firmware updates).
- **.eir** — These are IR driver files containing infrared commands. There is a separate .eir file for each device the WC Pro 160 controls via infrared communication. Via Global Configurator, ControlScript, and the embedded web pages, these files can be imported and associated with an IR port on a controller.
- **.gcplus** — This is a Global Configurator Plus configuration file.
- **.gcpro** — This is a Global Configurator Professional configuration file.
- **.pkp** — This is a driver package file for GC configuration.
- **.pkj** — This is a driver package file for web-based configuration.

SNMP

Extron control products support Simple Network Management Protocol (SNMP). SNMP facilitates the exchange of basic network management information between network devices. It helps in monitoring of operations and factors such as packet usage, memory usage, remote password resets, and collection of error information. An information technology administrator can use common IT tools to monitor those factors, as well as look up device location and the name of the contact person for the device.

The SNMP controls within Toolbelt provide a way to enable or disable SNMP. It also allows you to specify related information such as the name of a contact person, the physical location of the unit, and a community name. The text that is specified in these fields is seen by the network community when the unit is queried.

Extron control products support the following security levels:

- Management Information Base 2 (MIB-II)
- SNMPv2c

Firmware Updates

If the need arises, the WC Pro 160 firmware can be replaced.

Determining the Firmware Version

There are several ways to check which version of firmware the controller is using:

- View the device information in Toolbelt.
- View the information on the `Device Detail` panel of the `Device Utilities` screen in the WC Pro embedded web pages.
- View the GlobalViewer (GV) web pages (if the controller has already been configured and the GV web pages have been generated, built, and uploaded to the controller).
- View the hardware settings unit information in PCS.

Before using any of those methods, connect the controller and the PC to the same network. For details see **Installation and Operation** starting on page 7, and **Software-based Configuration and Control** starting on page 35.

Using Toolbelt

1. Open the Toolbelt software. (Alternatively, start Global Configurator in either GC Professional or GC Plus mode and open the Toolbelt link.)
2. Either add the desired WC Pro manually or start device discovery and select the desired controller from the list of discovered devices.
3. Click **`Manage`** in the row for the desired controller and view the device information that appears in that section.

Using a browser

The controller comes with a set of factory default embedded web pages. Also, after configuration, the GlobalViewer (GV) application could be installed in the unit, providing a different set of web pages (see the *Global Configurator Help File* for information on how to use that software and the resulting web pages). Either type of web page (factory default or GV) can be used to find the firmware version and part number of the unit.

1. Start a browser program.
2. Type the IP address of the WC Pro 160 into the address field of the browser and log on to the internal web page or to the optional GlobalViewer web page stored in the WC Pro project information drop-down panel (see the *Global Configurator Help File* for details).

   NOTE: If no IP address has been assigned, enter the default IP address: `192.168.254.250`.

3. Locate the `Device Detail` panel.

Using PCS

1. Open PCS and select the IP address of the desired WC Pro 160 from the `Device Discovery` list.
2. On the PCS screen for your WC Pro 160, click the down arrow on the **`Device`** tab.
3. From the `Device` drop-down list, select **`Settings`**/**`Hardware Settings`**. The `Hardware Information` window opens. The `Firmware Version` number is located in the top panel (see figure 41, ❶).

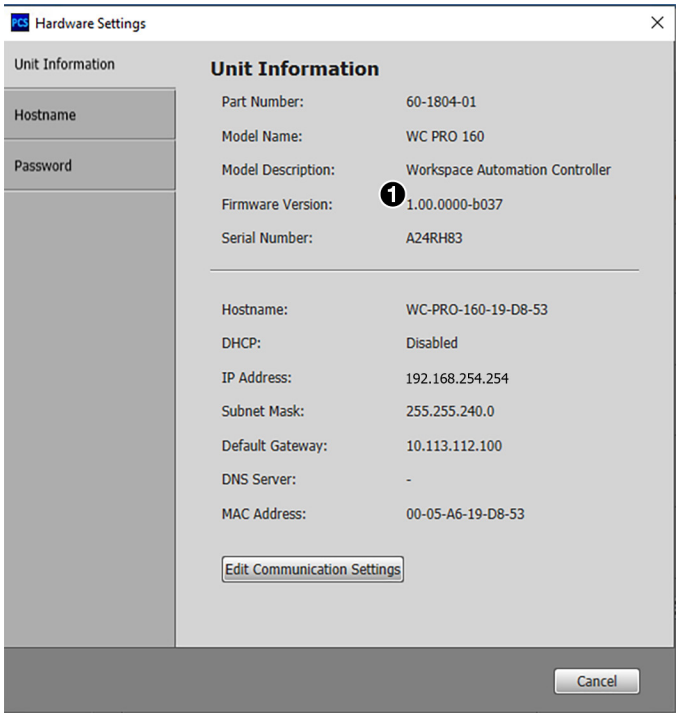

Figure 41. Unit Information Screen in PCS

Updating the Firmware

Firmware upgrade tools require the PC and the controller both to be connected to an Ethernet network. The instructions for each method of updating the WC Pro 160 firmware assume the appropriate software has been installed on your PC first.

NOTES:

- Save the existing configuration to a file (see the *Global Configurator Help File* for instructions) before replacing the firmware. If the file is saved, the configuration can be restored to the WC Pro later using GC, if needed.
- Check the Extron website for firmware-related documents, instructions, patch files, and new firmware files before loading new firmware into the controller. We recommend that you read the firmware release notes (available from **www.extron.com**) before beginning the firmware update.

Locating and downloading the firmware

1. Go to the **Extron website** to find the latest firmware file for the WC Pro. The easiest way to locate files is through the **`Downloads`** tab on the web page for the specific model.
2. Download the executable installer file (`*.exe`) from the website and run the installer program. The program automatically stores the firmware file on the PC in `C:\Program Files (x86)\Extron\Firmware\WC_Pro_160` within a folder specific to that version.

3. Write down the firmware filename and location for later use. The filename ends in `.eff` such as `49-591-50-x.xx.xxxx-yyyy.eff` where *x.xx.xxxx* is the version number.

> **NOTE:** The firmware update file must have a filename extension of `.eff`. If the file does not have that extension, it does not work properly.

Installing the firmware

Firmware can be replaced by using one of the following:

- Internal web page (available when a GC configuration is not loaded)
- Global Configurator (using the link to Toolbelt)
- Toolbelt
- PCS

These methods allow you to browse to find and select the appropriate `.eff` file on your PC and then click an **`Upload`** button to initiate the firmware upload to the controller.

> **NOTE:** Use Toolbelt to update multiple devices with the same firmware version simultaneously.

Allow a few minutes for the firmware to finish uploading. At the end of the upload process, the unit partially reboots and loses its connection to the PC. To continue using software, reconnect to the controller after it finishes rebooting.

Extron Warranty

This Limited Warranty does not apply if the fault has been caused by misuse, improper handling care, electrical or mechanical abuse, abnormal operating conditions or non-Extron authorized modification to the product. Extron Electronics makes no further warranties either expressed or implied with respect to the product and its quality, performance, merchantability, or fitness for any particular use. In no event will Extron Electronics be liable for direct, indirect, or consequential damages resulting from any defect in this product even if Extron Electronics has been advised of such damage. Please note that laws vary from state to state and country to country, and that some provisions of this warranty may not apply to you.

Powered Warranty

Extron warrants its powered products against defects in materials and workmanship for a period of three years from the date of invoice. In the event of malfunction during the warranty period, Extron will repair or replace a product to whatever extent it shall deem necessary to restore the product to proper operating condition.

Powered Warranty Exception

Everlast™ Power Supplies — Extron warrants Everlast power supplies against any defects in materials and workmanship for a period of seven years from the date of invoice. In the event of a malfunction during the warranty period, Extron will repair or replace the power supply to its original operating condition. Extron engineers will examine the returned product and determine whether the Everlast Power Supply Warranty or Powered Product Warranty applies.

Speakers — Extron warrants Flat Field®, SoundField®, SpeedMount®, Column Array, and System INTEGRATOR® speakers against any defects in materials and workmanship for a period of five years from the date of invoice.

Touchscreens — Extron warrants touchscreen display and overlay components against any defects in materials and workmanship for a period of one year from the date of invoice.

Annotator 300 — Extron warrants the Annotator 300 against any defects in materials and workmanship for a period of five years from the date of invoice.

Non-Powered Warranty Exception

Cable Cubby, Hideaway Surface Access Enclosures and Retractors — Extron warrants Cable Cubby cable access enclosures, HSA Hideaway Surface Access enclosures, and Retractor cable retraction modules for a period of three years from the date of invoice.

Active Cables and Active Adapters — Extron warrants active cables and active adapter cables for a period of three years from the date of invoice.

Cable Termination Tools and Dies — Extron warrants cable termination tools for a period of three years from the date of invoice, excluding the die.

Return Information

Units must be returned insured, with shipping charges prepaid. If not insured, you assume the risk of loss or damage during shipment. Returned units must include the serial number and a description of the problem, as well as the name of the person to contact in case there are any questions.

NOTE: To assure the highest level of service, a return authorization number must be obtained from Extron before products are returned for service. Products must be shipped to Extron, prepaid along with proof of purchase **only** after obtaining a Return Authorization (RA) number from the Extron Customer Support department.

Please contact Extron to receive an RA (Return Authorization) number:

USA:	714.491.1500 or 800.633.9876	**Asia**:	65.6383.4400
Europe:	31.33.453.4040 or 800.3987.6673	**Japan**:	81.3.3511.7655
Africa and Middle East:	971.4.299.1800		

Worldwide Headquarters: Extron USA West, 1025 E. Ball Road, Anaheim, CA 92805, 800.633.9876